deceler

Precision. Quality. Reliability.

AD Series (Alpha Drive)

Rotary Indexing Tables

SANKYO AUTOMATION

Precision. Quality. Reliability.

RollerDrive® RGV Series

Servo Indexer

Design & Operation

Sankyo is the worldwide leader for indexing technology and continues to develop innovation in motion control. Sankyo's core indexing system is based upon the roller gear cam mechanism, a combination of a globoidal cam and cam followers in a precision machined turret. Output backlash is eliminated by preloading the cam follower bearings against the cam ribs.

The profile of the cam, and the rolling contact surfaces of the cam followers produce perfectly smooth, controlled motions with minimal wear. Compared to the competition, the AD Series has the largest cam followers in the industry. Larger internal components advantages are; rotate less revolutions for longer service life, more surface area for less wear, and more torque capacity for heavier loads with faster cycle times.

Features

- **Speed:** * Up to 80 CPM, cycle on demand with a VFD controller (index period dependent)
  * Up to 200 CPM, cycle on demand with a servo motor drive or continuous running mode
- **Accuracy:** ±15 to ±30 arc seconds (motion & housing size dependent)
- **Load Capacity:** Large internal components can move heavier loads
- **Motion Directions:** Operates in forward or reversed directions (oscillates with VFD or servo drives)
- **Motion Options:** Over 700 indexing stops & index period combinations
- **Maintenance Free:** Sealed & totally maintenance free for life
- **Load Size:** Supports 630 to 4,050mm (14 to 160") dial plate diameters
- **Sizes:** 8 housing sizes from 70 to 450mm (2.7 to 17.7") shaft centers
- **Housing Design:** Robust cast iron housing maintains accuracy & dampens vibration
- **Output Design:** Indexing & stationary flange for dial plate mounting with hollow bore to routing supply lines
- **Input Design:** Low profile geared motor or servo motor drives are normally within the indexer housing height
- **Warranty:** 4-year warranty

Optional Safety Features

- **Emergency Stop:** When an emergency stop circuit is designed to stop the indexer mid-cycle, we recommend a fail-safe spring engaged brake motor (engaged without power) or a servo motor drive.
- **Overload Clutch:** For applications when tooling crashes could occur, we offer an output torque limiting clutch to mechanically disconnect the rotating load which protects the indexer from damage.
- **Redundant Sensors:** Dual timing sensor options can avoid human injury or machinery damage from false starts if the main stop sensor fails or a sensor wire is cut/broken.

Geared Motor Drive

Servo Motor Drive

Specifications

Sizes	Units	7AD	9AD	11AD	15AD	19AD	23AD	33AD	45AD
Nominal dial diameter	inch	25	32	40	53	67	81	117	160
	mm	630	810	1,000	1,350	1,710	2,070	2,970	4,050
Cycles per minute	RPM	On demand: 0-66 with VFD drive, 0-200 with servo drive or 0-200 continuous							
Output stop quantity	-	2, 3, 4, 5, 6, 8, 10, 12, 15 & 16 with 1 dwell, 16, 20, 24 & 32 (other are available)							
Indexing accuracy (1 dwell)	arc sec	±30	±25	±20	±15				
Repetitive accuracy (1 dwell)	arc sec	±10			±7.5				
Oscillating angle	degrees	N/A (only by reversing the motor with controller)							
Max. axial load capacity	lb	1,660	3,120	4,150	6,240	13,460	20,230	27,000	37,000
	N	7,390	13,880	18,470	27,770	59,890	90,020	120,140	164,640
Max. radial load capacity	lb	590	845	1,310	2,490	3,470	4,370	5,850	8,490
	N	2,630	3,760	5,830	11,080	15,440	19,440	26,030	37,780
Bending/tilt moment	lb·in	2,300	3,890	6,950	15,200	28,000	42,820	86,300	159,700
	N·m	260	440	790	1,720	3,160	4,840	9,750	18,050
Bending moment rigidity	lb·in/rad	2.0E+06	4.0E+06	6.6E+06	1.8E+07	5.0E+07	7.4E+07	1.5E+08	2.9E+08
	N·m/rad	2.3E+05	4.5E+05	7.5E+05	2.0E+06	5.7E+06	8.4E+06	1.8E+07	3.3E+07
Input inertia	lb·in²	6.5	8.5	20.5	68.3	358.8	464.7	5,843.3	26,995.6
	kg·m²	0.0019	0.0025	0.006	0.020	0.105	0.136	1.71	7.90
Output inertia	lb·in²	11.6	37.9	118.5	553.5	1,876.0	5,757.9	28,328.3	88,094.7
	kg·m²	0.0034	0.0111	0.0347	0.162	0.549	1.685	8.29	25.78
Lubrication	-	maintenance free & seal for life							
Indexer only weight	lb	33	53	93	187	397	628	2,204	3,527
	kg	15	24	42	85	180	285	1,000	1,600
Geared motor weight (small/large motor option)	lb	13/19	19/25	25/39	39/71	71/121	121/176	322/331	536/631
	kg	6/8.5	8.5/11.5	11.5/17.5	17.5/32	32/55	55/80	146/150	243/286
Inline servo reducer weight (no servo motor)	lb	3.0	3.0	8.1	17.6	35.2	35.2	35.2/79.3	79.3
	kg	1.4	1.4	3.7	8.0	16	16	16/36	36
Output torque limiter weight	lb	9.9	21	33	95	163	243	N/A	N/A
	kg	4.5	9.6	15	43	74	110	N/A	N/A

	Output Stops (others are available)																														
Index Period	2	3	4	5	6	7	8	9	10	11	12	14	15	16	17	18	20	24	25	28	30	32	36	38	40	48	60	64	72	80
90°																														
120°									■		■		■	■																
150°							■		■		■		■	■																
180°					■		■		■		■		■	■			■	■				■								
210°				■	■		■		■		■		■	■			■	■				■								
240°			■	■	■		■		■		■		■	■			■	■				■								
270°		■	■	■	■		■		■		■		■	■			■	■				■								
300°		■																												
330°	■																													

■ Standard catalog configurations ☐ Specials configurations (others are available)

Deceler Vibrotek Controls Pvt. Ltd.

+91 - 9445525883 / sales@deceler.in / www.deceler.in

Indexer Options

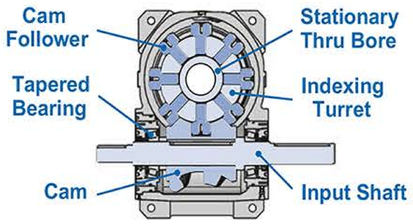

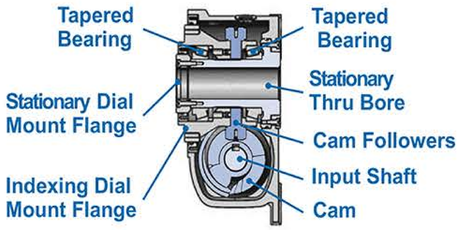

Model code example

9	AD	–	08	18	7	R	–	S	R3	VW	1	X
a	b		c	d	e	f		g	h	i	j	k

a Size	9 90mm, input-to-output distance, options: 70mm, 90mm, 110mm, 150mm, 190mm, 230mm, 330mm & 450mm
b Series	AD AD/Alpha Series
c Output Stops	08 8 Stops, number of indexer output stops
d Index Period	18 180 degrees, amount of input shaft/cam rotation period when the output rotates between stops
e Motion Curve	7 SMS-3 (Sankyo Modifed Sine), 8 SMCV-8 (Sankyo Modifed Constant Velocity), 9 Custom Motion (special order)
f Hand of Cam	R Right-hand (1 dwell) or R2 (2 dwell), input to output rotation relationship (RH is standard) L Right-hand (1 dwell) or L2 (2 dwell), input to output rotation relationship Note: Standard 1 dwell cams are 2 to 16 output stops, 2 dwell cams are 16 to 32 stops.
g Output Option	S Standard flange, L Optional output torque limiting clutch
h Input Shaft Projection	1 No drive, large shafts on T-side & no shaft on U-side 2 No drive, no shafts on T-side & large shaft on U-side 3 No drive, large shafts on T-side & small shaft on U-side 4 No drive, small shafts on T-side & large shaft on U-side R3 Drive mounts on T-side & small shaft on U-side (standard) R4 Drive mounts on U-side & small shaft on T-side
i Mounting Holes	VW Standard tapped mounting holes on V-side & thru holes on W-side. T & U-sides have tapped holes for motor mounting adapter plates.
j Mounting Surfaces	The housing is completely filled with oil & mounts at any angle. It's sealed & maintenance free for life. For mounting reference, please use below. 1=W-side at GL (std) 3=U-side at GL 5=R-side at GL 2=V-side at GL 4=T-side at GL 6=S-side at GL
k Special Requests	Blank box is for a standard unit. X Special requests are listed a certified drawing for cusomer approval.

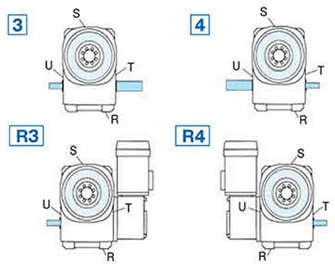

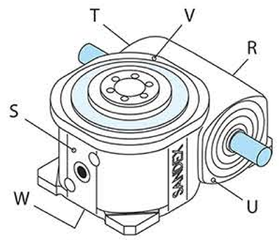

W- Side at Ground Level

Drive Motor Options

Geared Motor Drive

- Totally maintenance-free and sealed for life
- Inverter rated 230 & 460VAC dual voltage, reversible (standard)
- Fail-safe brake motor option for mid-cycle emergency stops
- Standard IP44 rating or optional IP65 rated for wash down applications
- Compact low profile is normally within the indexer housing height
- Mounts in 90° increments on either side of the indexer

Variable Frequency Drive (VFD) Motor Controller

- Variable motor speed, multiple presets or change speed on the fly
- Protects motor from over-current burnout
- 115V/1-ph, 230V/1-ph, 230V/3-ph, 460V/3-ph voltage/phase options
- Startup protect, VFD will error & fault if motor is jammed
- Internal contacts can stop/start accessories & signal lights
- Panel or din rail mounting

Servo Motor, Inline or Right Angle Reducer

- Inline or right angle reducer adapts to any servo motor brand
- For frequent stop/starts up to 200 cycles per minute
- Standard IP44 rating or optional IP67 rated for wash down applications
- Totally maintenance-free and sealed for life
- Normally within the indexer housing height & mounts on either side
- Optional FDA lubrication for packaging or medial applications

Model code example

GM	0.2	-	030	D	4	-	9AD	1	
a	b		c	d	e		f	g	

- [ ] = No Option
- B = Brake Motor
- W = Wash Down
- X = Special (drawing supplied)

a Model	b Motor Power	c Gear Ratio	d Motor Voltage	e Specification	f Model Size
Geared Motor GM Servo Drive SM	Indicates the motor power 0.2 ....0.2kW (0.25 HP) 0.75 ...0.75 kW (1 HP)	Indicates the gear ratio 005 .....5:1 010 .....10:1 20.37 ..20.37:1	Indicates the motor input voltage D 230/460V L 230 H 460	Indicates the motor drive manufacture 4 7~19AD standard 1 19~45AD standard X No Motor (special) Other motors available	Indicates the indexer housing size 9AD 7AD, 9AD 11AD, 15AD, 19AD, 23AD, 33AD & 45AD

g Mounting Positions

Indicates the motor mounting positions

1 Standard
2 & 3 are mounted on indexer T-side
9,10 & 11 are mounted on indexer U-side

X Specials are available

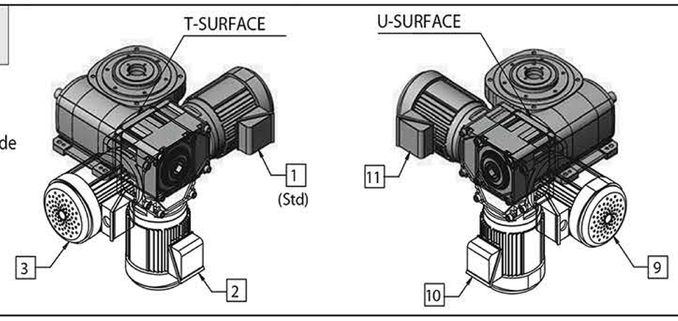

Timing Sensor Options

Timing Cam/Cycle Completed Sensor

We offer a cycle on demand timing cam package when the indexer is stopped every cycle. This package includes a proximity switch, right angle detachable cable, a timing cam and painted steel quick release cover. An optional second proximity switch is available for redundancy or additional interlock capacity.

Dimensions

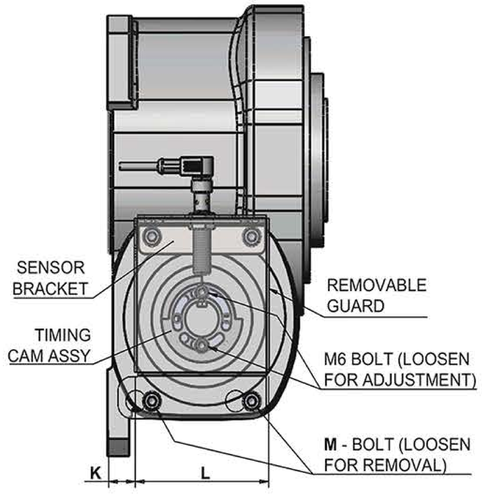

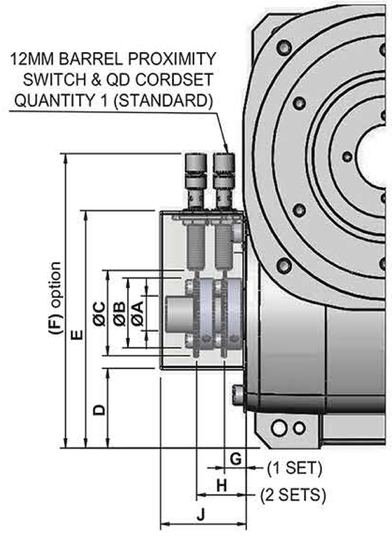

Unit	A	B	C	D	E	(F)	G	H	J	K	L	M
7AD	17	40	50	41	127	183	15.5	36.5	58	10	80	M8
9AD	25	49	60	46	146	194	16.5	37.5	65	12	96	M8
11AD	25	49	60	56	167	206	16.5	37.5	65	20	100	M8
15AD	25	49	60	72	173	227	18.5	39.5	67	26	118	M10
19AD	25	49	60	82	209	279	18.5	39.5	67	42	146	M12
23AD	25	49	60	84	219	273	18.5	39.5	67	63	168	M12

Model code example

TC - D 1 U - 9 AD - PNP - 1

a b c d e f g h

a Model	b Sensor Type	c Number of Sets	d USA Standard	e Model Sizes	f Series	g Sensor Polarity	h Number of Cam Dwells
Timing Cam & Sensor TC	D M12 Proximity Switch with QD 2 Meter Cable, Bracket, Timing Cam & Cover E Bracket, Timing Cam & Cover (no prox switch or cable)	1 Standard 2 Option 3 Special	U Standard	7 9 11 15 19 23 33 45	AD	PNP Standard NPN Option	1 2~16 Stops 2 16~48 Stops 3 48~80 Stops 4 40~80 Stops

Torque Limiting Clutch Options

TAD Series Output Clutch

Our TAD series is designed to free spin when overloaded and automatically resets accurately at the original position when the load torque is below the preset. Dial plates or fixtures can mount to the center pilot flange and includes a hollow center bore.

- Easy adjust torque range changes in seconds without disassembly
- Automatically resets every 360° within ±15 arc seconds accuracy
- Trip torque accuracy is with ±10% of the preset torque
- Hollow bore design accepts riser post and/or overload sensor
- Compact low profile height is 40 to 74mm (1.57" to 2.91")
- 12 torque ranges from 40 to 5500 Nm (354 to 48,679 lb*in)

Dimensions

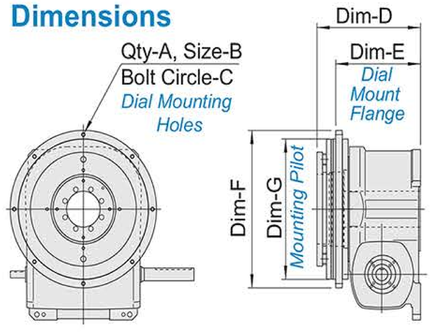

Size	Qty-A	Size-B	B.C.-C	Dim-D	Dim-E	Dim-F	Dim-G
7AD	6	M5x0.8	168	159.5	129	Ø180	Ø155 $^{+0.0}_{-0.040}$
9AD	8	M8x1.25	220	192	152.5	Ø240	Ø200 $^{+0.0}_{-0.046}$
11AD	8	M10x1.5	260	220	175	Ø285	Ø235 $^{+0.0}_{-0.046}$
15AD	8	M12x1.75	365	265	212	Ø395	Ø335 $^{+0.0}_{-0.057}$
19AD	8	M12x1.75	450	341	272	Ø480	Ø420 $^{+0.0}_{-0.063}$
23AD	8	M14x1.75	525	393	322	Ø555	Ø495 $^{+0.0}_{-0.063}$

Model code example

9 TAD - 20 L

a b c d

a Torque limter size	b Model	c Max. tripping torque	d Spring type
7 Fits 7AD 9 Fits 9AD 11 Fits 11AD 15 Fits 15AD 19 Fits 19AD 23 Fits 23AD	TAD Series flange to flange type	20 20 Nm torque capacity 550 550 Nm torque capacity	L Light spring type H Heavy spring type

Model code example

TLS - 9TAD - PNP - D

a b c d

a Torque limiter sensor	b TAD Series size	c Sensor polarity type	d Sensor type
TLS Torque limiter overload detection sensor pkg.	9TAD Series size	PNP PNP-NO/NC (standard) NPN NPN-NO/NC	D Proximity type C Mount only

7AD Specifications

Typical Dial Size	25" (630mm)
Output Stops	2,3,4,5,6,8,10,12,15,16,20,24 & 32
Indexes Per Minute	Up to 200 IPM (66 IPM with VFD)
Indexing Accuracy (2~16 stops)	+/-30 arc seconds
Repetitive Accuracy	+/-10 arc seconds
Max. Output Axial Load	1,660 lbs. (7,390 N)
Max. Output Radial Load	590 lbs. (2,630 N)
Max. Output Bending Moment	2,300 lb*in (260 N*m)
Output Bending Moment Rigidity	2.0E+06 lb*in/rad (2.3E+05 N*m/rad)
Output Inertia	11.61 lb*in² (0.0034 kg*m²)
Input Inertia	6.49 lb*in² (0.0019 kg*m²)
Max. Input Torque	824 lb*in (93.1 N*m)
Drive Motor Voltage	230 & 460 VAC, 3 Phase (60 Hz)
Drive Motor Sizes	1/8 & 1/4 HP (0.1 & 0.2 kW)
Indexer Weight / with Gearmotor	33/49.5 & 33/54 lbs. (15/22.5 & 15/24.5 kg)

Load Capacity (inertia vs. time)

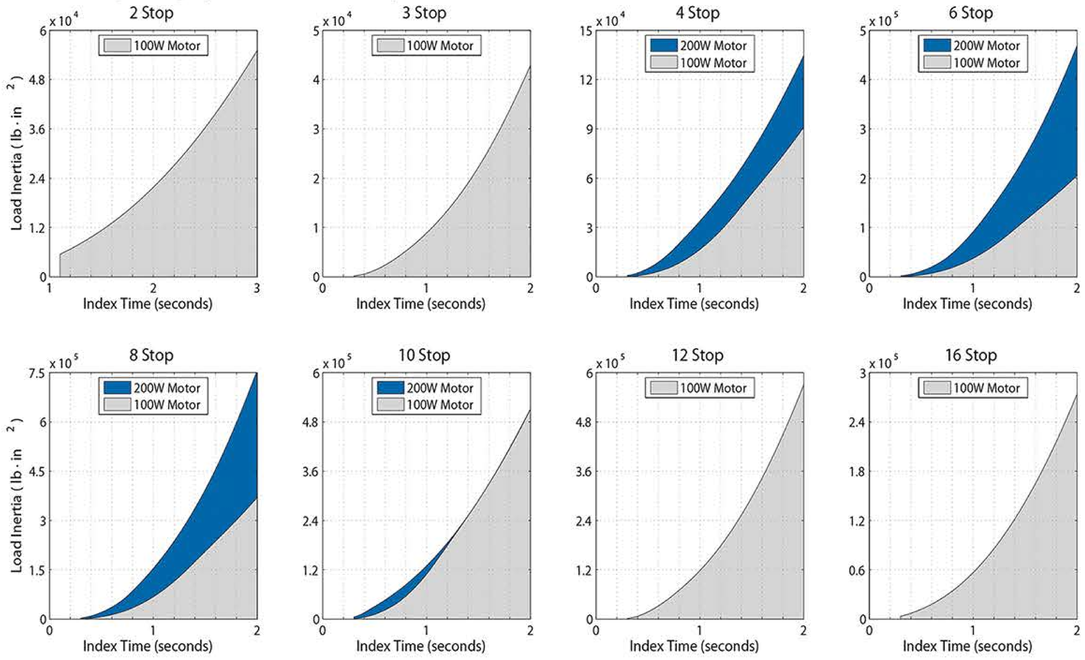

Load Data

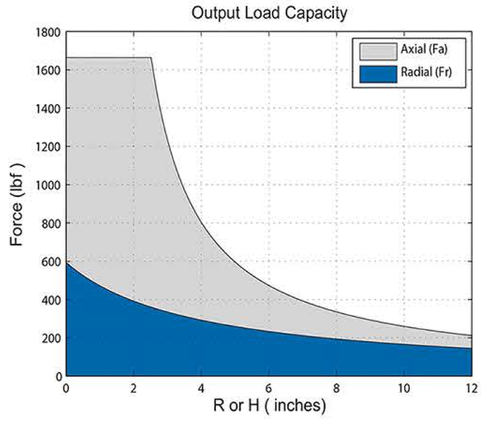

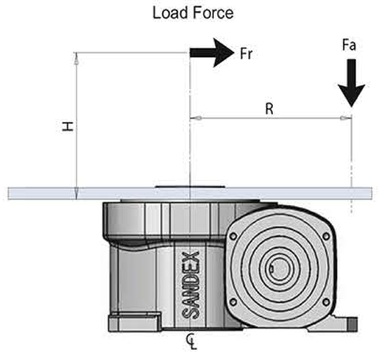

NOTES:
- Loads are for unidirectional loading only, contact Sankyo for combined loading.
- 1 lbf = 4.448 N, 1 inch = 25.4mm

7AD Dimensions

1/8 HP (0.1 kW) Motor

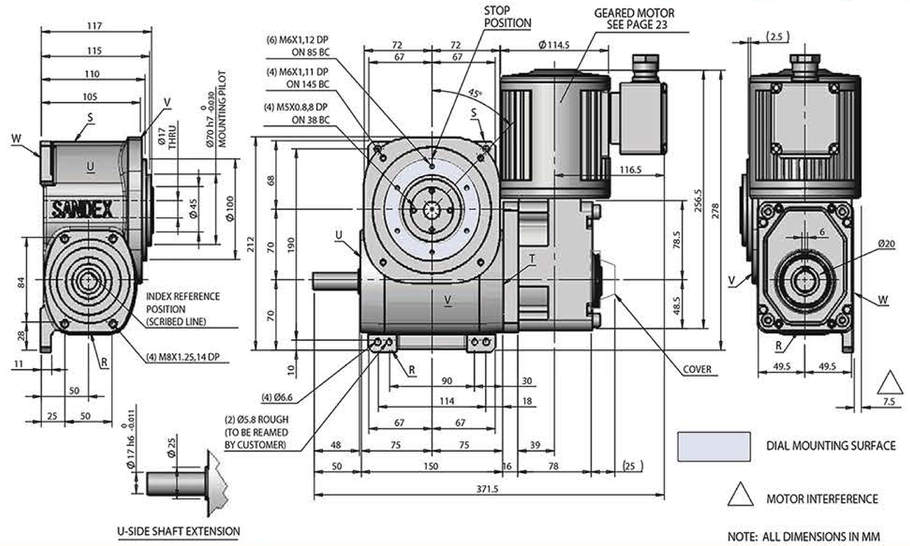

1/4 HP (0.2 kW) Motor

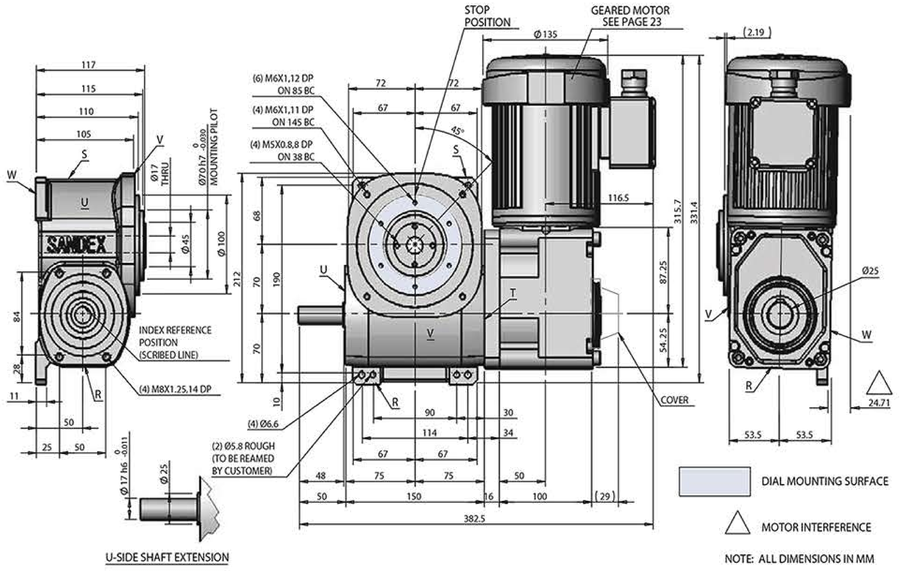

Standard Input Shaft (T Surface)

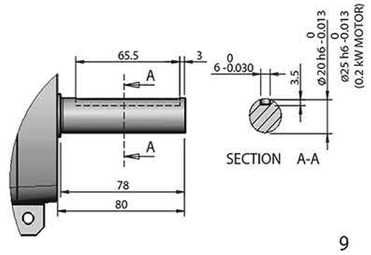

Output Flange Dimensions

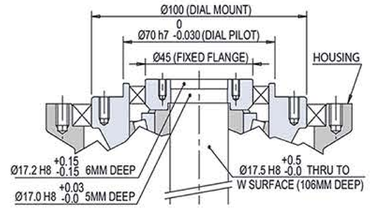

Deceler Vibrotek Controls Pvt. Ltd.
+91 - 9445525883 / sales@deceler.in / www.deceler.in

9AD Specifications

Typical Dial Size	32" (810mm)
Output Stops	2,3,4,5,6,8,10,12,15,16,20,24 & 32
Indexes Per Minute	Up to 200 IPM (66 IPM with VFD)
Indexing Accuracy (2~16 stops)	+/-25 arc seconds
Repetitive Accuracy	+/-10 arc seconds
Max. Output Axial Load	3,120 lbs. (13,880 N)
Max. Output Radial Load	845 lbs. (3,760 N)
Max. Output Bending Moment	3,890 lb*in (440 N*m)
Output Bending Moment Rigidity	4.0E+06 lb*in/rad (4.5E+05 N*m/rad)
Output Inertia	37.93 lb*in² (0.0111 kg*m²)
Input Inertia	8.54 lb*in² (0.0025 kg*m²)
Max. Input Torque	2,168 lb*in (245 N*m)
Drive Motor Voltage	230 & 460 VAC, 3 Phase (60 Hz)
Drive Motor Sizes	1/4 & 1/2 HP (0.2 & 0.4 kW)
Indexer Weight / with Gearmotor	53/72 & 53/78 lbs. (24/32.6 & 24/35.5 kg)

Load Capacity (inertia vs. time)

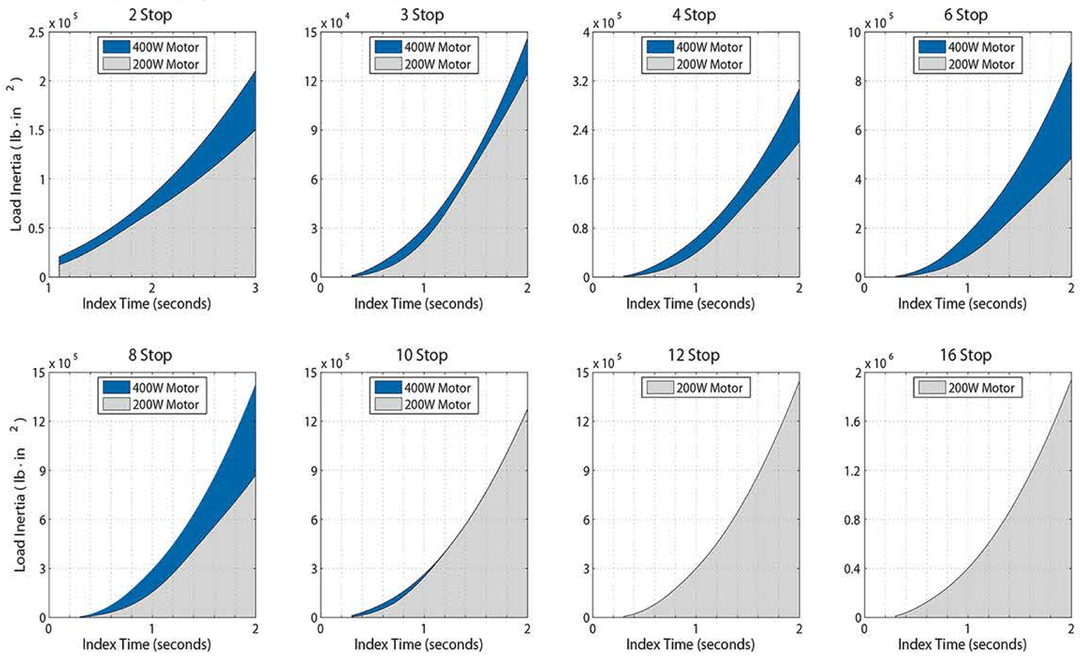

Load Data

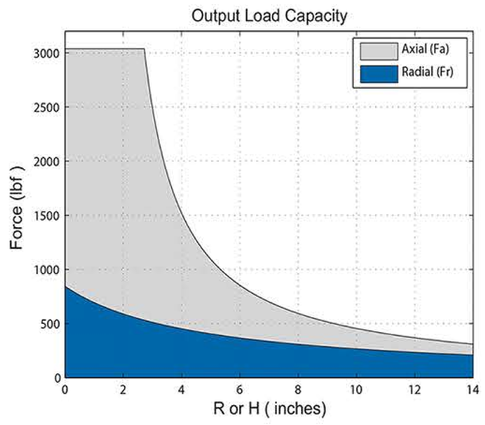

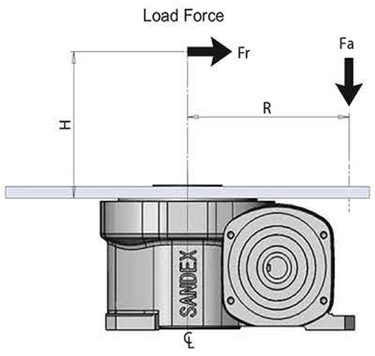

NOTES:
- Loads are for unidirectional loading only, contact Sankyo for combined loading.
- 1 lbf = 4.448 N, 1 inch = 25.4mm

9AD Dimensions

1/4 HP (0.2 kW) Motor

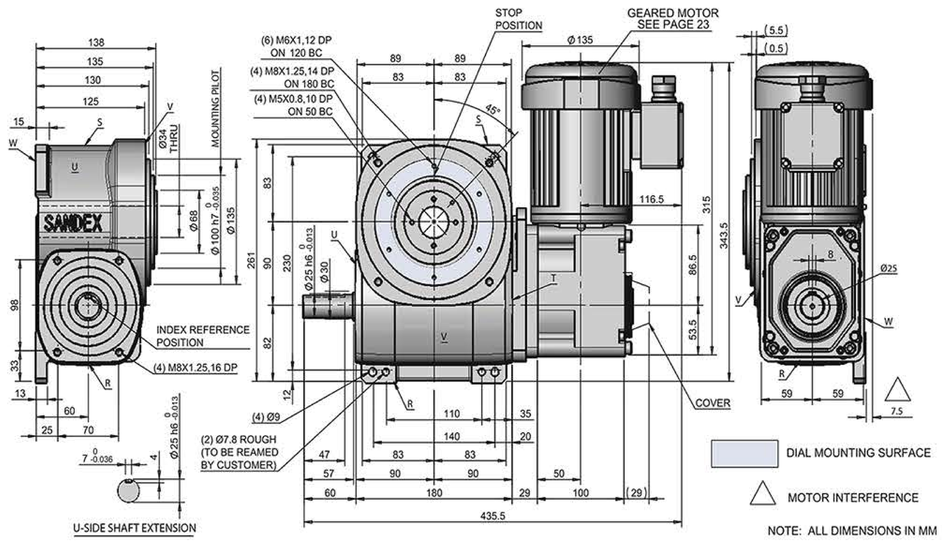

1/2 HP (0.4 kW) Motor

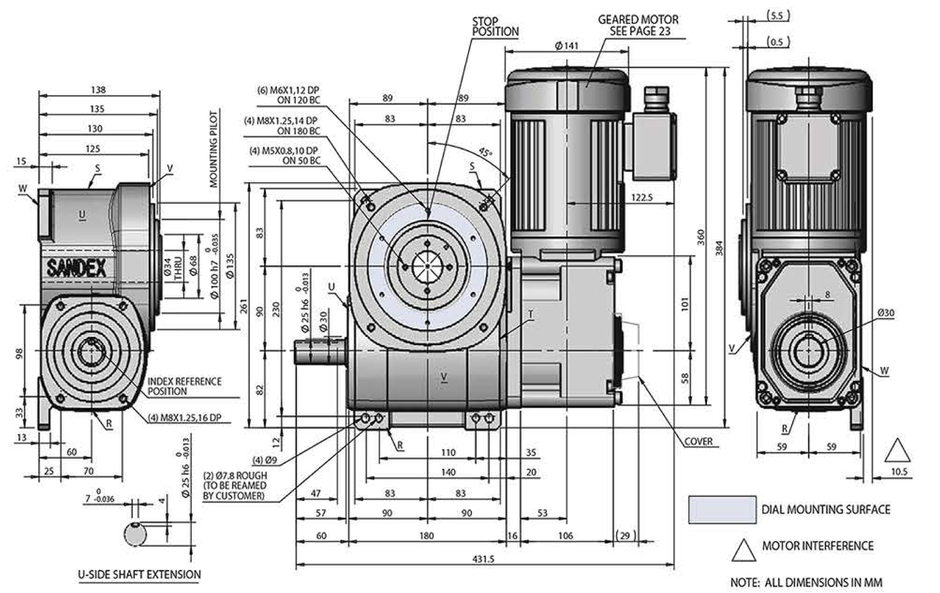

Standard Input Shaft (T Surface)

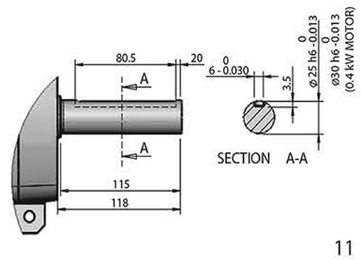

Output Flange Dimensions

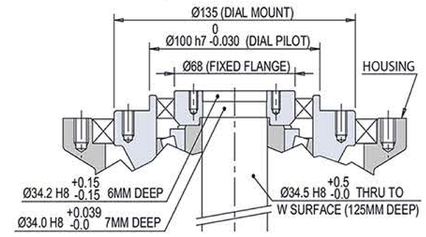

11AD Specifications

Typical Dial Size	40" (1,000mm)
Output Stops	2,3,4,5,6,8,10,12,15,16,20,24 & 32
Indexes Per Minute	Up to 200 IPM (66 IPM with VFD)
Indexing Accuracy (2~16 stops)	+/-20 arc seconds
Repetitive Accuracy	+/-10 arc seconds
Max. Output Axial Load	4,150 lbs. (18,470 N)
Max. Output Radial Load	1,310 lbs. (5,830 N)
Max. Output Bending Moment	6,950 lb*in (790 N*m)
Output Bending Moment Rigidity	6.6E+06 lb*in/rad (7.5E+05 N*m/rad)
Output Inertia	118.57 lb*in² (0.0347 kg*m²)
Input Inertia	20.5 lb*in² (0.006 kg*m²)
Max. Input Torque	2,602 lb*in (294 N*m)
Drive Motor Voltage	230 & 460 VAC, 3 Phase (60 Hz)
Drive Motor Sizes	1/2 & 1 HP (0.4 & 0.75 kW)
Indexer Weight / with Gearmotor	93/118 & 93/132 lbs. (42/53.5 & 42/59.5 kg)

Load Capacity (inertia vs. time)

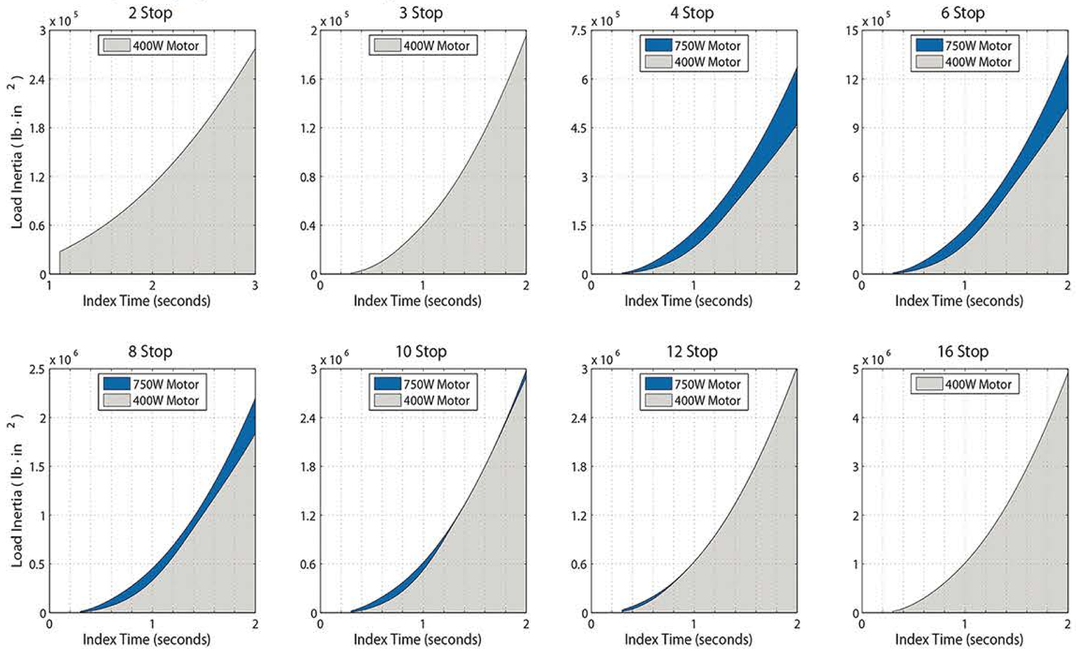

Load Data

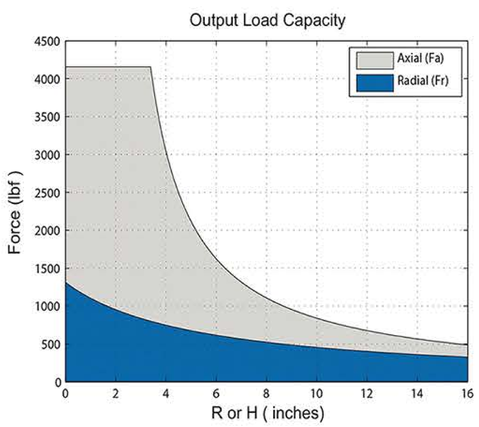

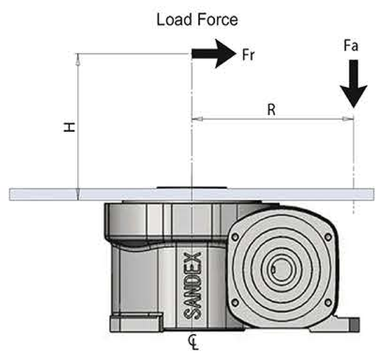

NOTES:
- Loads are for unidirectional loading only, contact Sankyo for combined loading.
- 1 lbf = 4.448 N, 1 inch = 25.4mm

11AD Specifications

Typical Dial Size	40" (1,000mm)
Output Stops	2,3,4,5,6,8,10,12,15,16,20,24 & 32
Indexes Per Minute	Up to 200 IPM (66 IPM with VFD)
Indexing Accuracy (2~16 stops)	+/-20 arc seconds
Repetitive Accuracy	+/-10 arc seconds
Max. Output Axial Load	4,150 lbs. (18,470 N)
Max. Output Radial Load	1,310 lbs. (5,830 N)
Max. Output Bending Moment	6,950 lb*in (790 N*m)
Output Bending Moment Rigidity	6.6E+06 lb*in/rad (7.5E+05 N*m/rad)
Output Inertia	118.57 lb*in² (0.0347 kg*m²)
Input Inertia	20.5 lb*in² (0.006 kg*m²)
Max. Input Torque	2,602 lb*in (294 N*m)
Drive Motor Voltage	230 & 460 VAC, 3 Phase (60 Hz)
Drive Motor Sizes	1/2 & 1 HP (0.4 & 0.75 kW)
Indexer Weight / with Gearmotor	93/118 & 93/132 lbs. (42/53.5 & 42/59.5 kg)

Load Capacity (inertia vs. time)

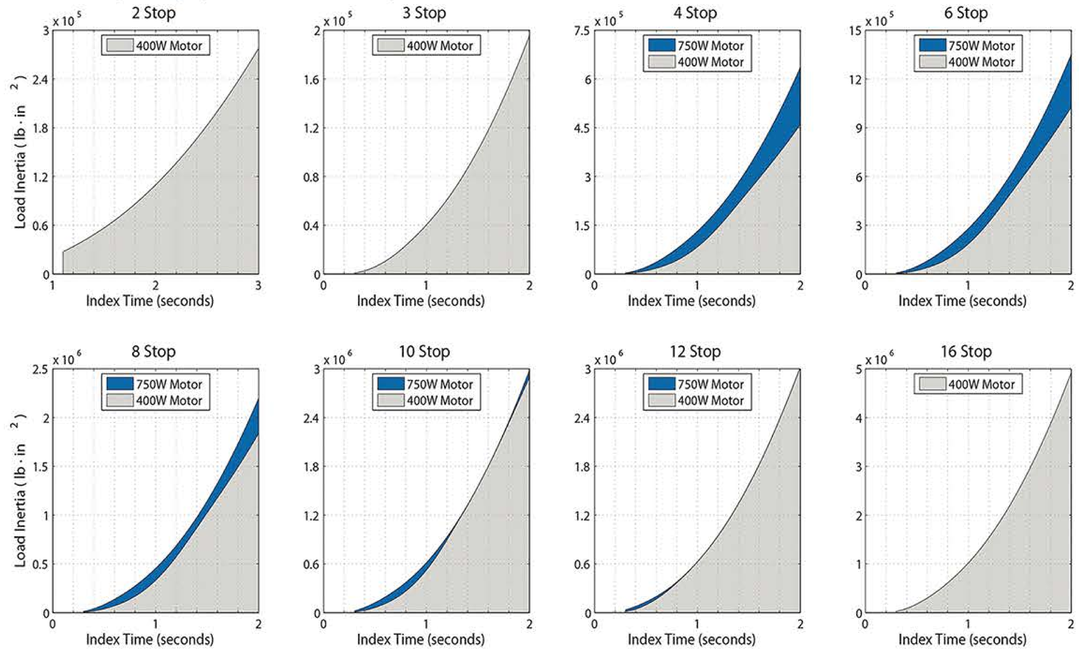

Load Data

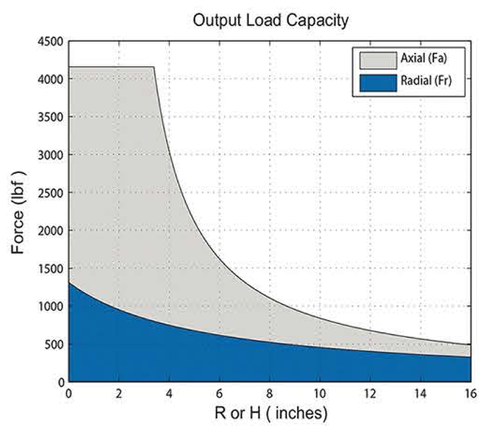

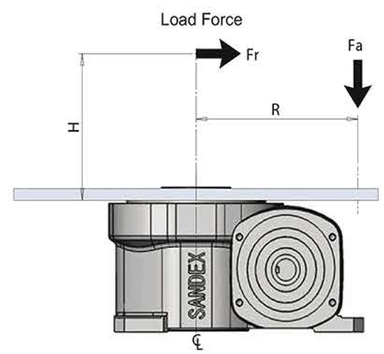

NOTES:
- Loads are for unidirectional loading only, contact Sankyo for combined loading.
- 1 lbf = 4.448 N, 1 inch = 25.4mm

Deceler Vibrotek Controls Pvt. Ltd.

+91 - 9445525883 / sales@deceler.in / www.deceler.in

15AD Specifications

Typical Dial Size	53" (1,350mm)
Output Stops	2,3,4,5,6,8,10,12,15,16,20,24 & 32
Indexes Per Minute	Up to 200 IPM (66 IPM with VFD)
Indexing Accuracy (2~16 stops)	+/-15 arc seconds
Repetitive Accuracy	+/-7.5 arc seconds
Max. Output Axial Load	6,240 lbs. (27,770 N)
Max. Output Radial Load	2,490 lbs. (11,080 N)
Max. Output Bending Moment	15,200 lb*in (1,720 N*m)
Output Bending Moment Rigidity	1.8E+07 lb*in/rad (2.0E+06 N*m/rad)
Output Inertia	553.58 lb*in² (0.162 kg*m²)
Input Inertia	68.34 lb*in² (0.020 kg*m²)
Max. Input Torque	3,470 lb*in (392 N*m)
Drive Motor Voltage	230 & 460 VAC, 3 Phase (60 Hz)
Drive Motor Sizes	1 & 2 HP (0.75 & 1.5 kW)
Indexer Weight / with Gearmotor	187/226 & 187/258 lbs. (85/103 & 85/117 kg)

Load Capacity (inertia vs. time)

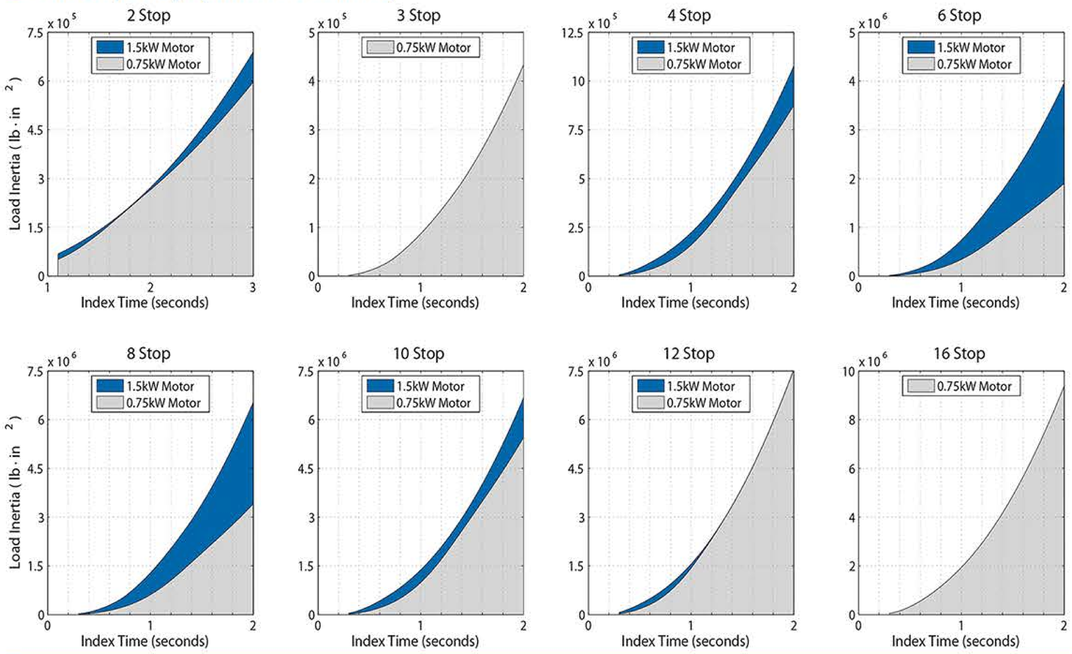

Load Data

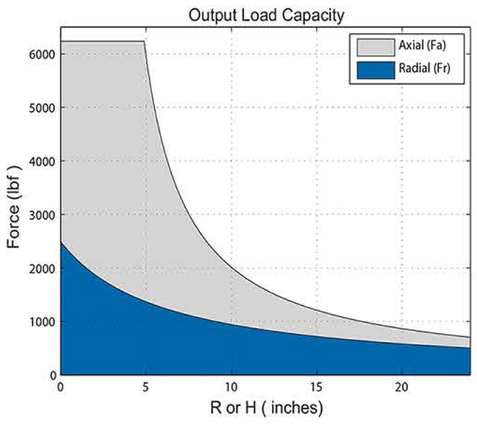

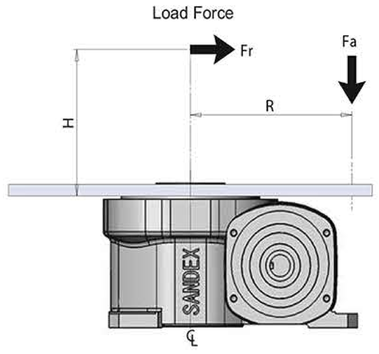

NOTES:
- Loads are for unidirectional loading only, contact Sankyo for combined loading.
- 1 lbf = 4.448 N, 1 inch = 25.4mm

15AD Dimensions

1 HP (0.75 kW) Motor

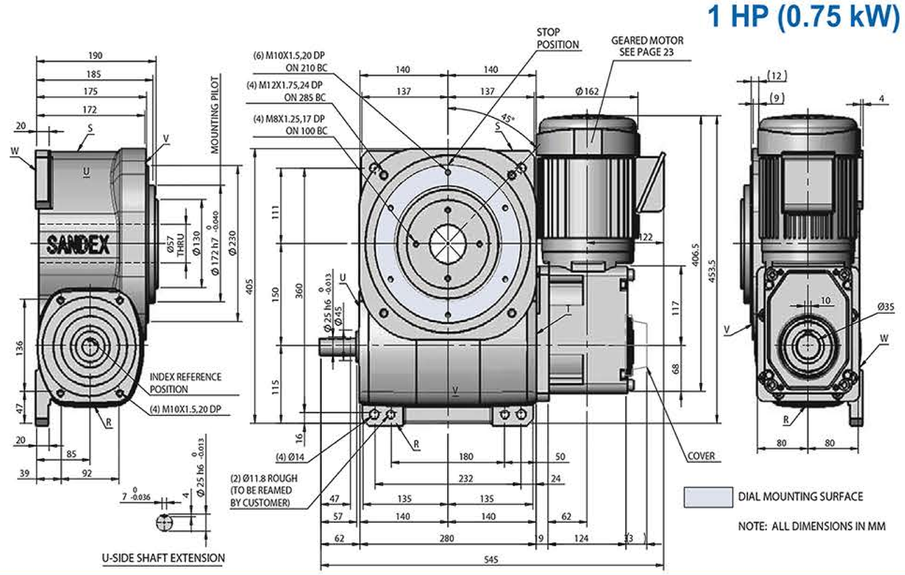

2 HP (1.5 kW) Motor

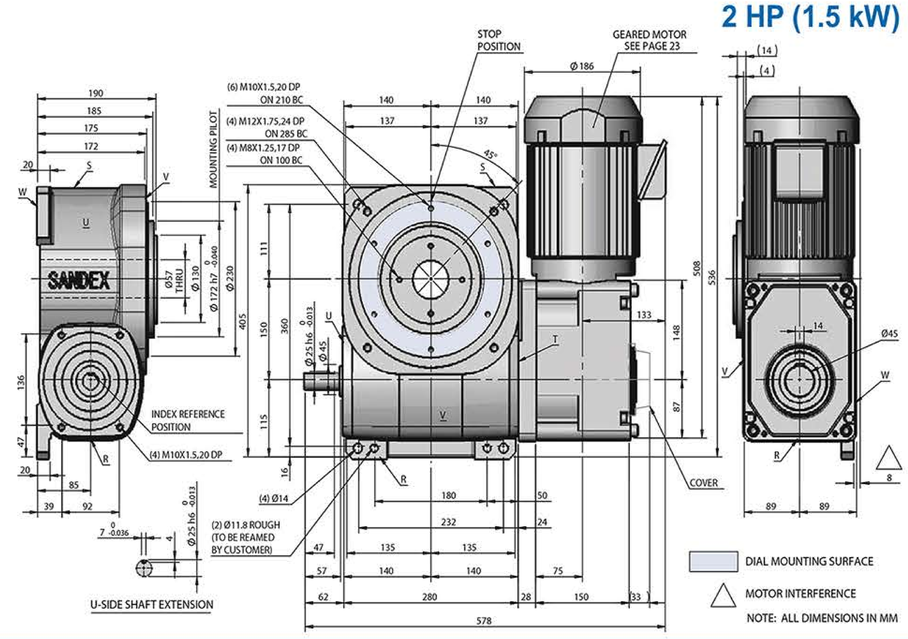

Standard Input Shaft (T Surface)

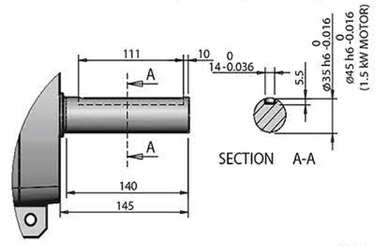

Output Flange Dimensions

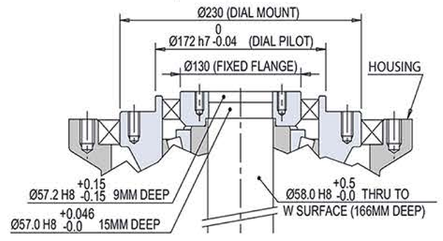

Deceler Vibrotek Controls Pvt. Ltd.

+91 - 9445525883 / sales@deceler.in / www.deceler.in

19AD Specifications

Typical Dial Size	67" (1,710mm)
Output Stops	2,3,4,5,6,8,10,12,15,16,20,24 & 32
Indexes Per Minute	Up to 200 IPM (66 IPM with VFD)
Indexing Accuracy (2~16 stops)	+/-15 arc seconds
Repetitive Accuracy	+/-7.5 arc seconds
Max. Output Axial Load	13,460 lbs. (59,890 N)
Max. Output Radial Load	3,470 lbs. (15,440 N)
Max. Output Bending Moment	28,000 lb*in (3,160 N*m)
Output Bending Moment Rigidity	5.0E+07 lb*in/rad (5.7E+06 N*m/rad)
Output Inertia	1,876.02 lb*in² (0.549 kg*m²)
Input Inertia	358.80 lb*in² (0.105 kg*m²)
Max. Input Torque	5,311 lb*in (600 N*m)
Drive Motor Voltage	230 & 460 VAC, 3 Phase (60 Hz)
Drive Motor Sizes	2 & 3 HP (1.5 & 2.2 kW)
Indexer Weight / with Gearmotor	397/468 & 397/518 lbs. (180/212 & 180/235 kg)

Load Capacity (inertia vs. time)

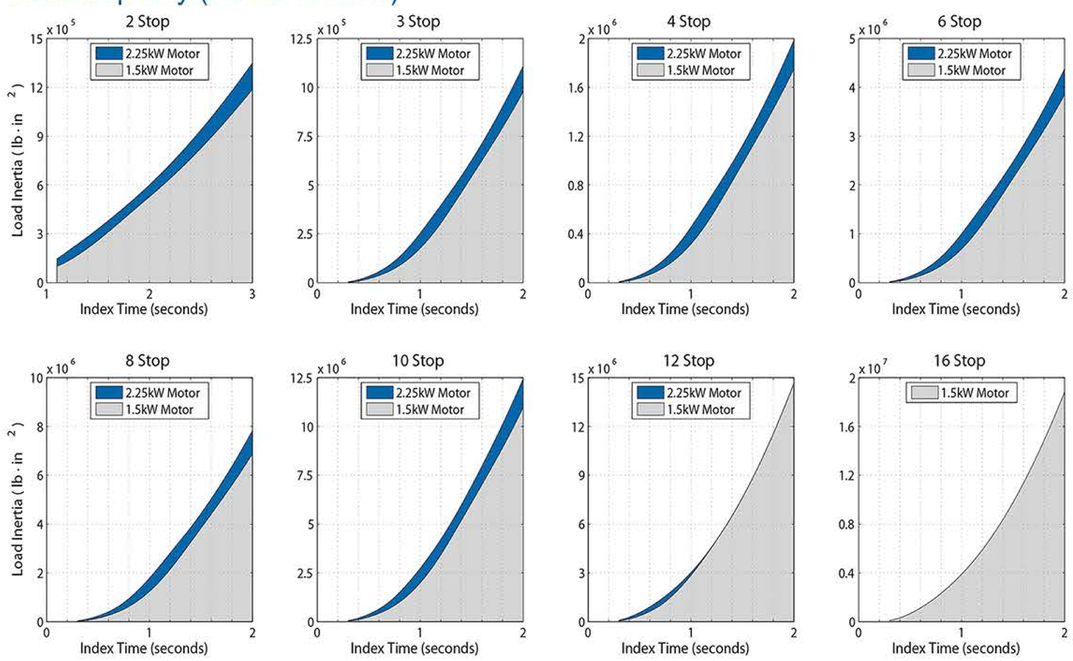

Load Data

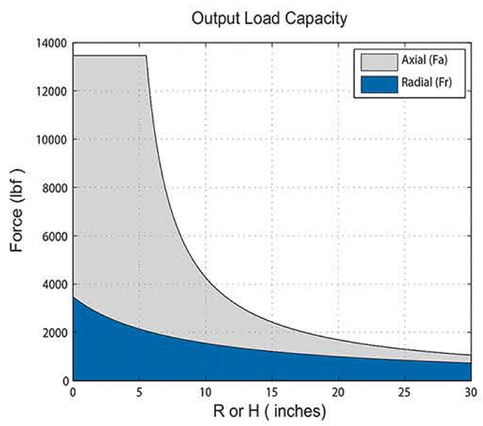

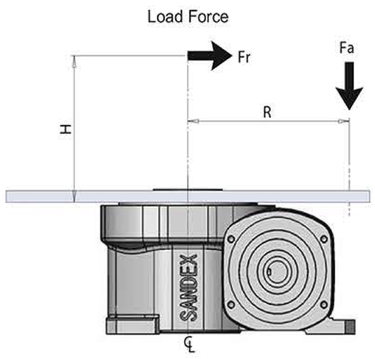

NOTES:
- Loads are for unidirectional loading only, contact Sankyo for combined loading.
- 1 lbf = 4.448 N, 1 inch = 25.4mm

19AD Dimensions

2 HP (1.5 kW) Motor

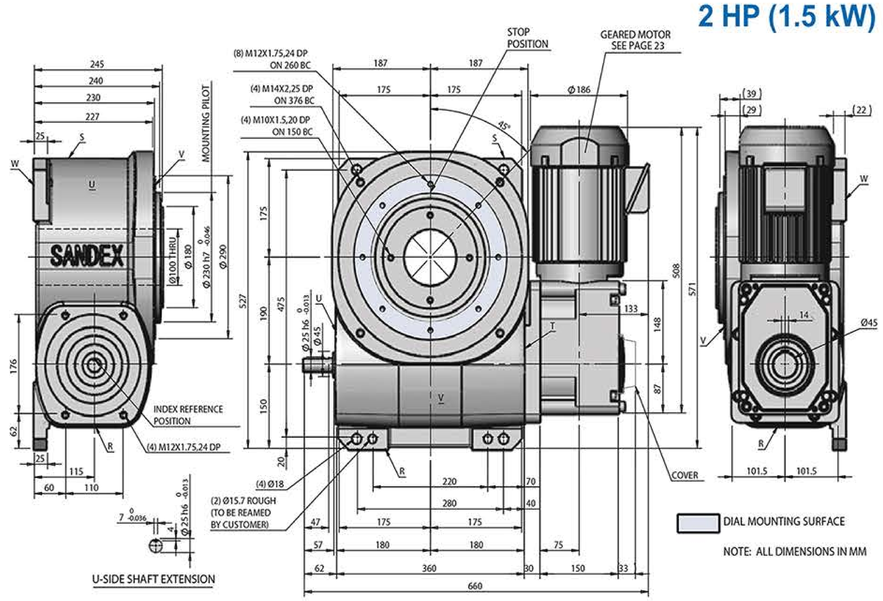

3 HP (2.2 kW) Motor

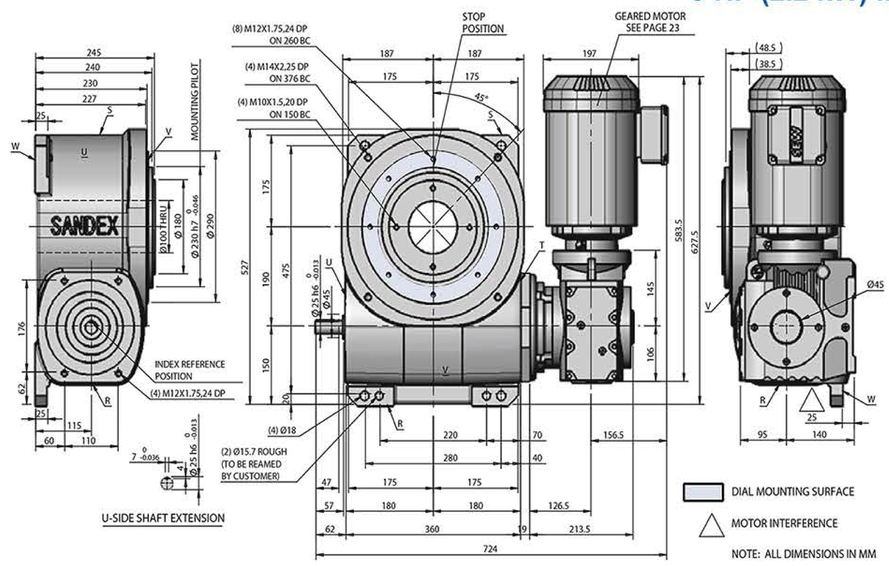

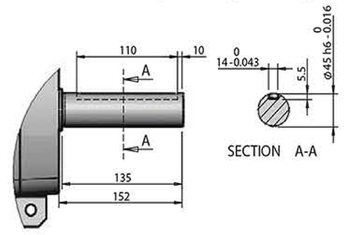

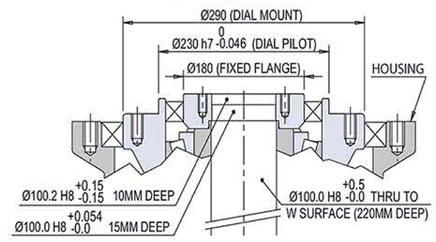

Deceler Vibrotek Controls Pvt. Ltd.
+91 - 9445525883 / sales@deceler.in / www.deceler.in

23AD Specifications

Typical Dial Size	81" (2,070mm)
Output Stops	2,3,4,5,6,8,10,12,15,16,20,24 & 32
Indexes Per Minute	Up to 200 IPM (66 IPM with VFD)
Indexing Accuracy (2~16 stops)	+/-15 arc seconds
Repetitive Accuracy	+/-7.5 arc seconds
Max. Output Axial Load	20,230 lbs. (90,020 N)
Max. Output Radial Load	4,370 lbs. (19,440 N)
Max. Output Bending Moment	42,820 lb*in (4,840 N*m)
Output Bending Moment Rigidity	7.4E+07 lb*in/rad (8.4E+06 N*m/rad)
Output Inertia	5,757.93 lb*in² (1.685 kg*m²)
Input Inertia	464.73 lb*in² (0.136 kg*m²)
Max. Input Torque	6,938 lb*in (784 N*m)
Drive Motor Voltage	230 & 460 VAC, 3 Phase (60 Hz)
Drive Motor Sizes	3 & 5 HP (2.2 & 3.7 kW)
Indexer Weight / with Gearmotor	628/749 & 628/804 lbs. (285/340 & 285/365 kg)

Load Capacity (inertia vs. time)

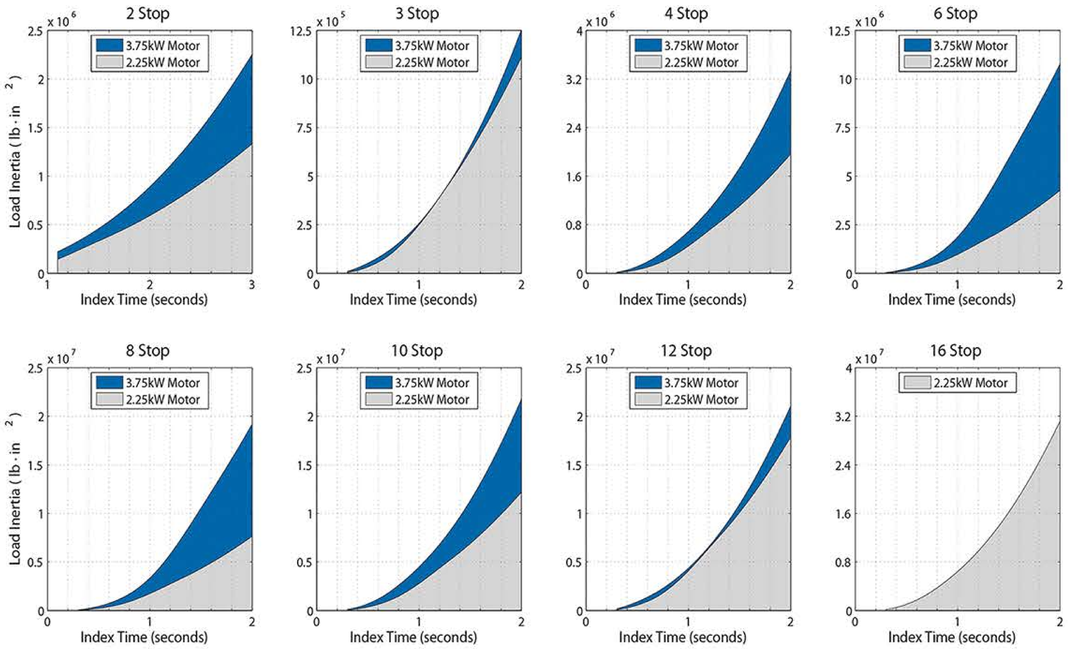

Load Data

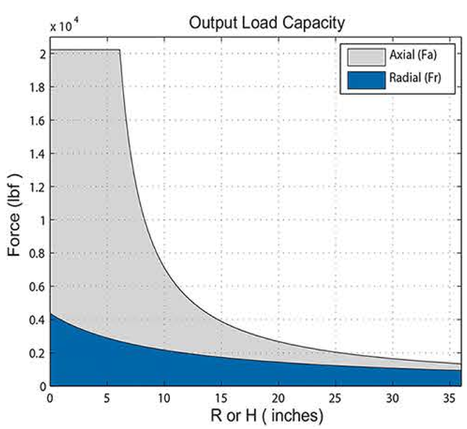

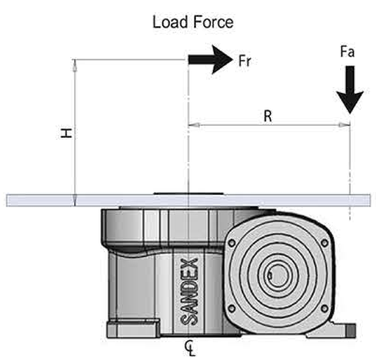

NOTES:
- Loads are for unidirectional loading only, contact Sankyo for combined loading.
- 1 lbf = 4.448 N, 1 inch = 25.4mm

23AD Dimensions

3 HP (2.2 kW) Motor

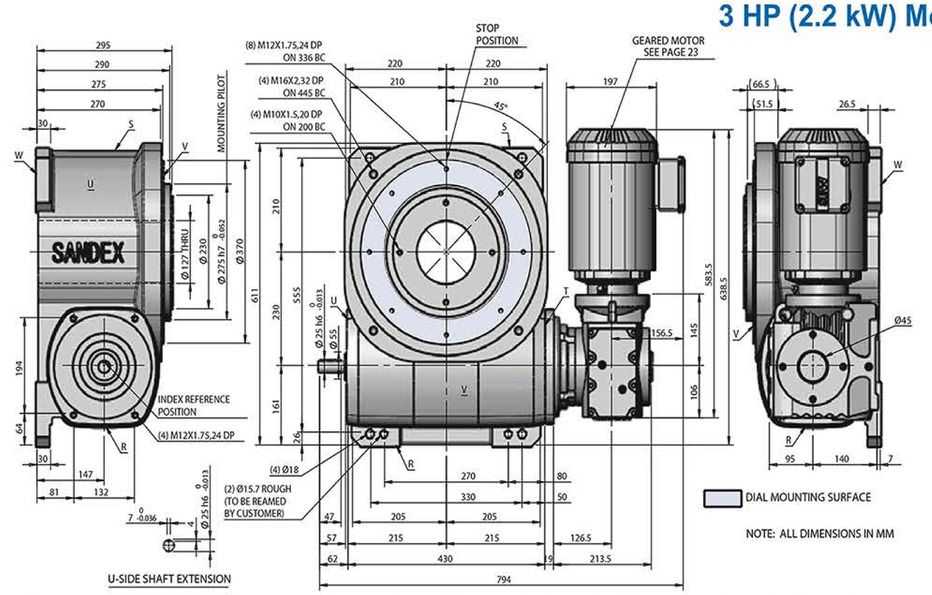

5 HP (3.7 kW) Motor

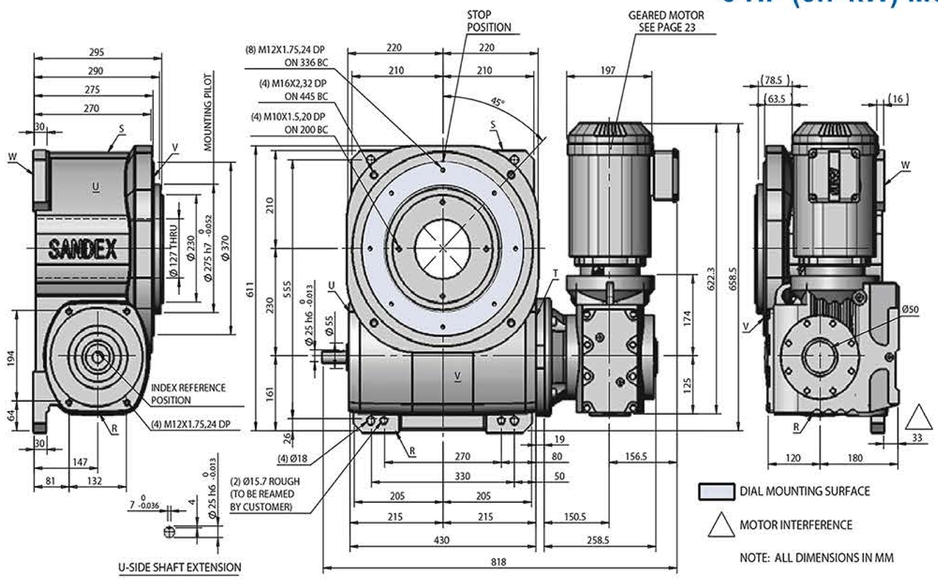

Standard Input Shaft (T Surface)

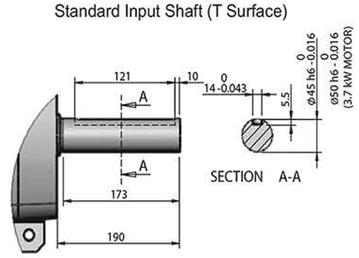

Output Flange Dimensions

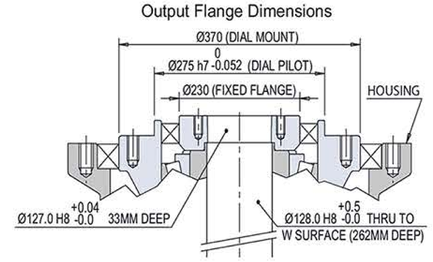

33AD Specifications

Typical Dial Size	117" (2,970mm)
Output Stops	2,3,4,5,6,8,10,12,15,16,20,24 & 32
Indexes Per Minute	Up to 200 IPM (66 IPM with VFD)
Indexing Accuracy (2~16 stops)	+/-15 arc seconds
Repetitive Accuracy	+/-7.5 arc seconds
Max. Output Axial Load	27,000 lbs. (120,140 N)
Max. Output Radial Load	5,850 lbs. (26,030 N)
Max. Output Bending Moment	68,300 lb*in (9,750 N*m)
Output Bending Moment Rigidity	1.5E+08 lb*in/rad (1.8E+07 N*m/rad)
Output Inertia	28,328.35 lb*in² (8.290 kg*m²)
Input Inertia	5,843.36 lb*in² (1.710 kg*m²)
Max. Input Torque	56,644 lb*in (6,400 N*m)
Drive Motor Voltage	230 & 460 VAC, 3 Phase (60 Hz)
Drive Motor Sizes	7.5 & 10 HP (5.5 & 7.5 kW)
Indexer Weight / with Gearmotor	2,205/2,536 lbs. (1,000/1,150 kg)

Load Capacity (inertia vs. time)

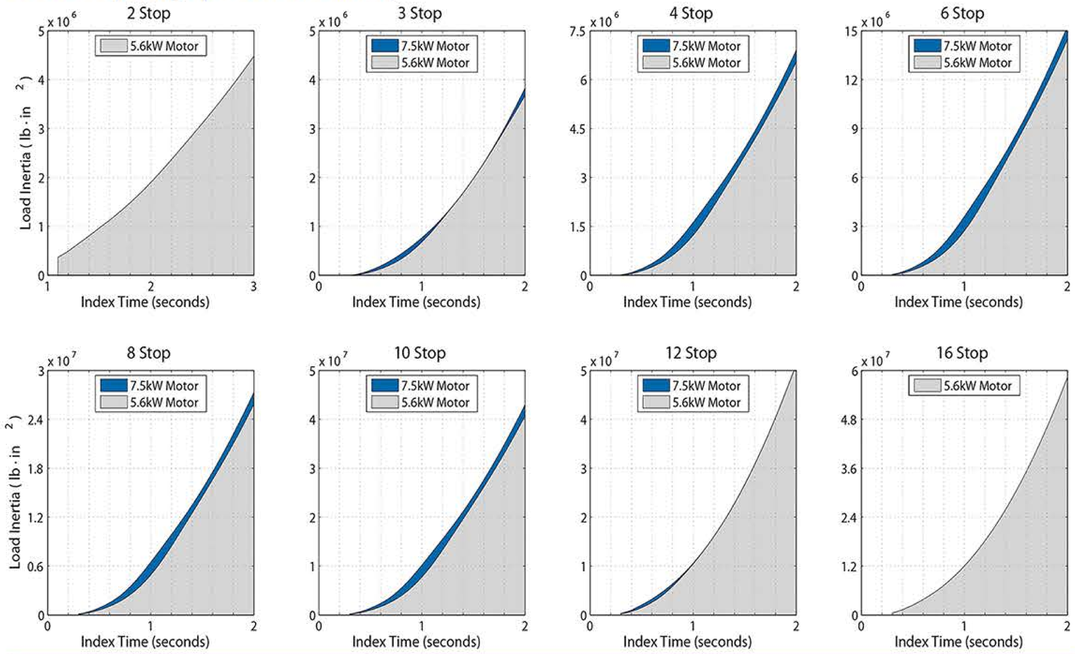

Load Data

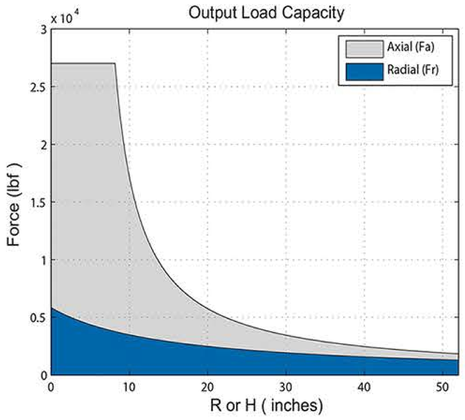

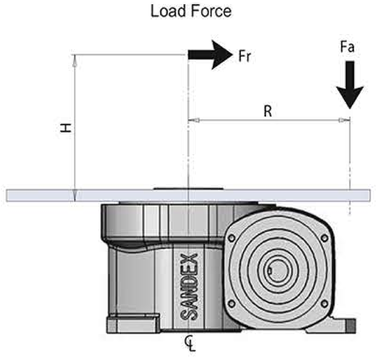

NOTES:
- Loads are for unidirectional loading only, contact Sankyo for combined loading.
- 1 lbf = 4.448 N, 1 inch = 25.4mm

33AD Dimensions

7.5 HP (5.5 kW) Motor

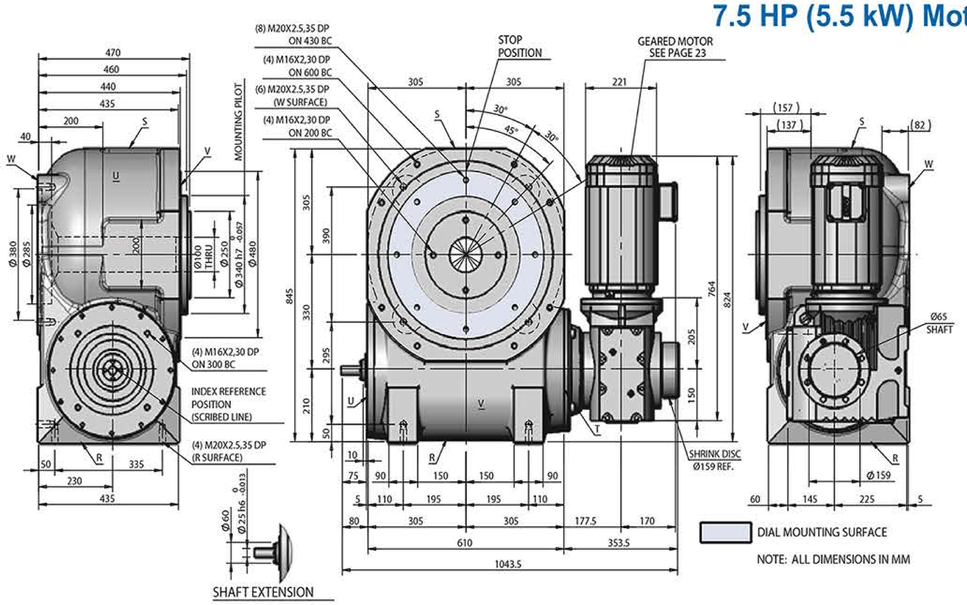

10 HP (7.5 kW) Motor

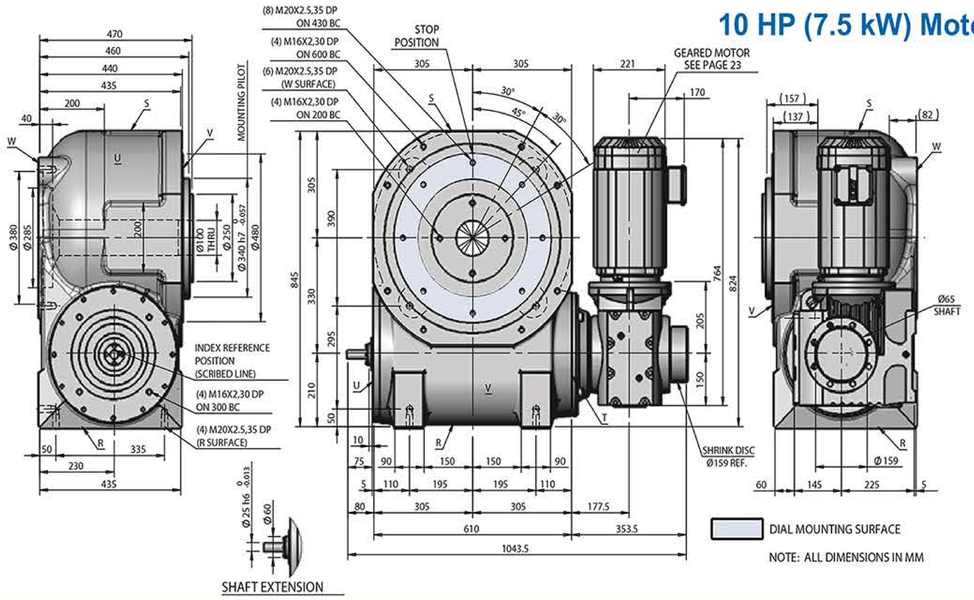

Standard Input Shaft (T Surface)

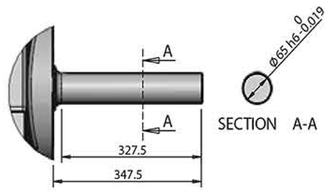

Output Flange Dimensions

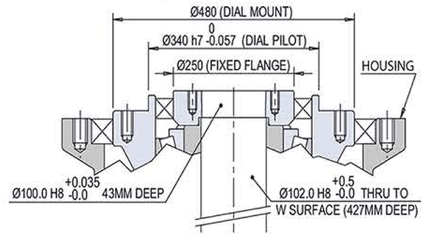

45AD Specifications

Typical Dial Size	160" (4,050mm)
Output Stops	2,3,4,5,6,8,10,12,15,16,20,24 & 32
Indexes Per Minute	Up to 200 IPM (66 IPM with VFD)
Indexing Accuracy (2~16 stops)	+/-15 arc seconds
Repetitive Accuracy	+/-7.5 arc seconds
Max. Output Axial Load	37,000 lbs. (164,640 N)
Max. Output Radial Load	8,490 lbs. (37,780 N)
Max. Output Bending Moment	159,700 lb*in (18,050 N*m)
Output Bending Moment Rigidity	2.9E+08 lb*in/rad (3.3E+07 N*m/rad)
Output Inertia	88,094.69 lb*in² (25.780 kg*m²)
Input Inertia	26,995.65 lb*in² (7.900 kg*m²)
Max. Input Torque	74,346 lb*in (8,400 N*m)
Drive Motor Voltage	230 & 460 VAC, 3 Phase (60 Hz)
Drive Motor Sizes	15 & 20 HP (11 & 15 kW)
Indexer Weight / with Gearmotor	3,527/4,158 lbs. (1,600/1,886 kg)

Load Capacity (inertia vs. time)

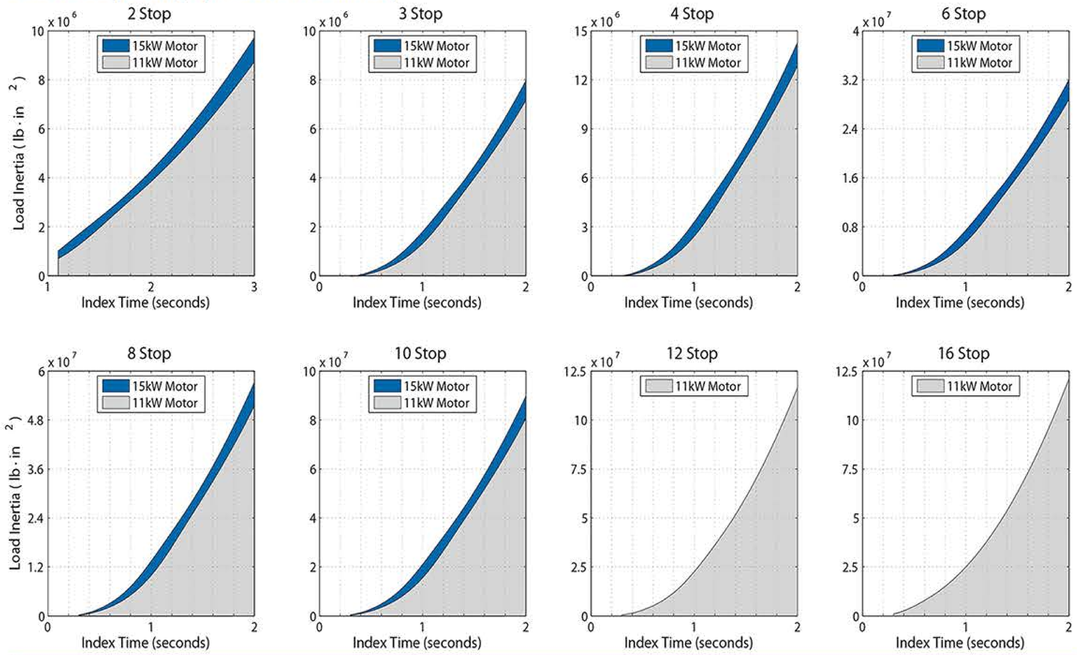

Load Data

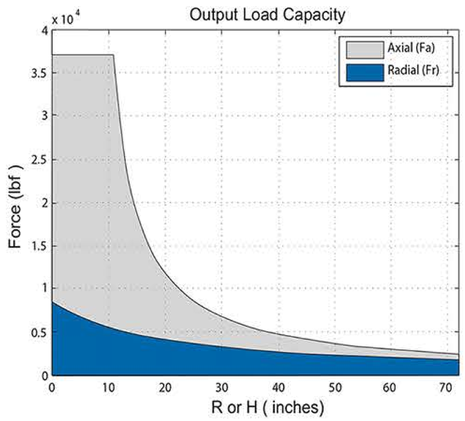

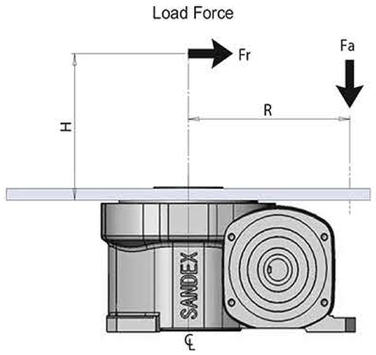

NOTES:
- Loads are for unidirectional loading only, contact Sankyo for combined loading.
- 1 lbf = 4.448 N, 1 inch = 25.4mm

45AD Dimensions

15 HP (11 kW) Motor

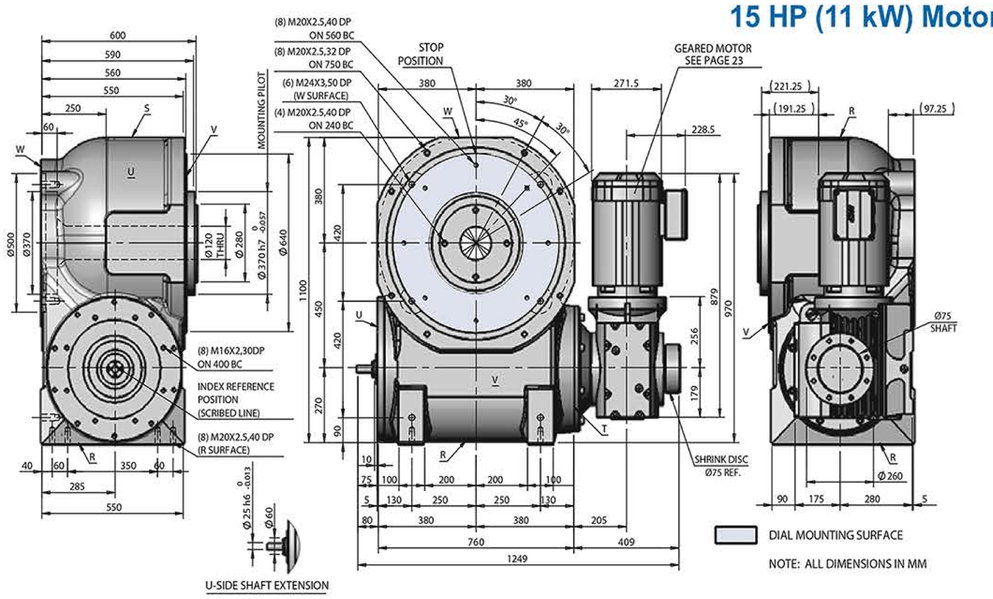

20 HP (15 kW) Motor

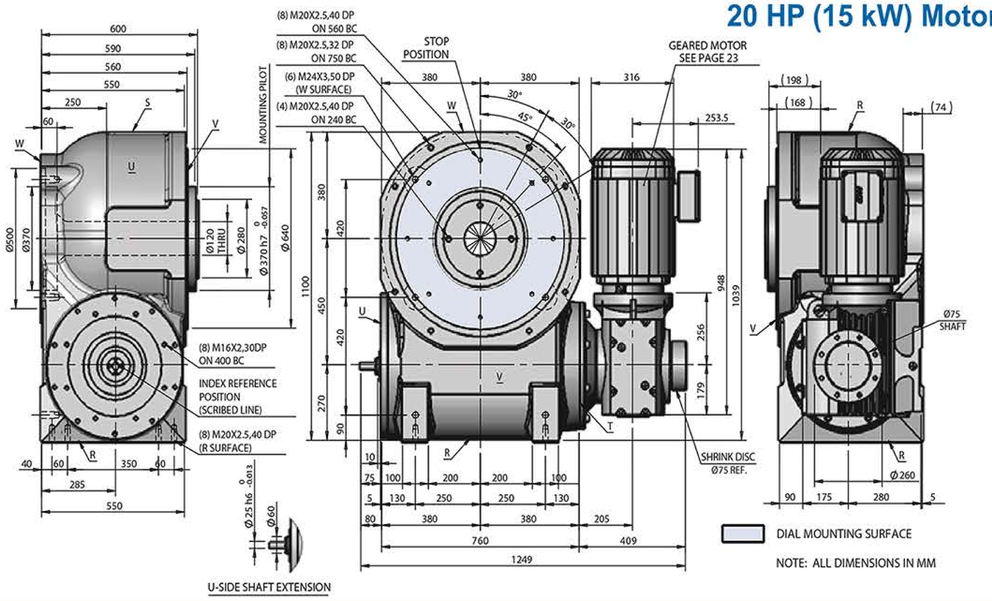

Standard Input Shaft (T Surface)

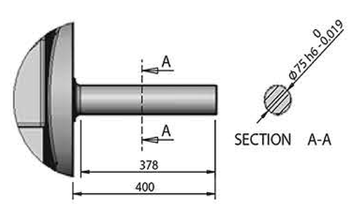

Output Flange Dimensions

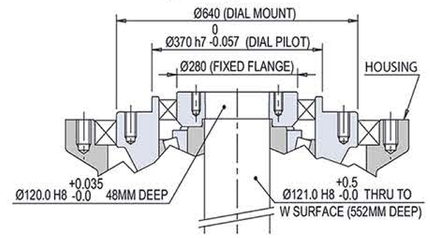

Application Form - Quote Request

Thank you for considering our products. If you wish to receive a formal quotation, please complete this data sheet with your application information.

- You may call in your application to Sankyo Sales at (937) 498.4901 or fax to (937) 498.9403.
- Online form website link: www.sankyoautomation.com
- Scan/e-mail link: sales@sankyoautomation.com

Company	
Address	
Contact Name	
Tel	
E-mail Address	

A) Number of output stops/stations.....

B) Index time to move between stations [sec].....

C) Dwell time or process time [sec].....

Indexing Dial Plate or Fixture

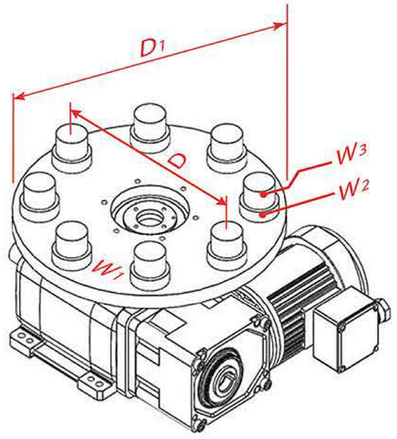

D_1 - Dial Plate Diameter [mm]
W_1 - Dial Plate Weight [kg]
D - Part/fixture Diameter [mm]
W_2 - Fixture Weight [kg]
W_2 - Fixture Quantity
W_3 - Part Weight [kg]
W_3 - Part Quantity
Notes

Indexing Conveyor

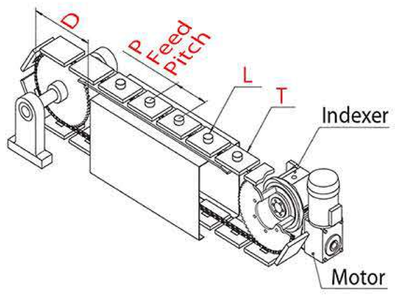

D - Sprocket Diameter [mm]
D_1 - Sprocket Quantity (idler?)
P - Part Feed Pitch [mm]
L - Load/part Weight [kg]
L_1 - Load/part Quantity
T - Tooling Weight [kg]
T_1 - Tooling Quantity

SANKYO AUTOMATION

Precision. Quality. Reliability.

***RollerDrive*® RGV Series**

Servo Indexer

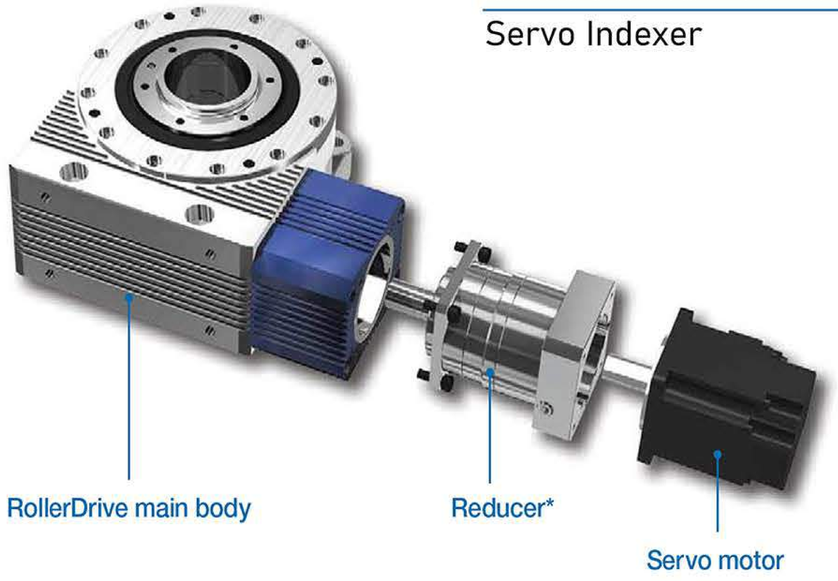

*For high gear ratio model

The ZERO-Backlash Technology

A mechanism developed through the pursuit of outstanding functionality and performance

Superior movement achieved with zero-backlash technology

The RollerDrive is a zero-backlash reducer that utilizes a rolling transmission method with preload adjustment for high-dimensional accuracy, responsiveness, and rigidity with stable performance over long periods.
The large-diameter hole construction with a direct input/output shaft layout enables a compact design with zero backlash. Meanwhile, the rolling transmission method of the RollerDrive provides a characteristic long service life.

Positioner Lineup

For general factory automation

MR
Ultra-compact model

RGV
Standard model

RGR
Large-diameter model

RA
Lightweight model

RU
High-rigidity model

For welding machines

SP
Standard model

RW
High-accuracy model

Roller gear cam mechanism

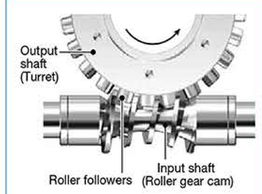

Preload mechanism

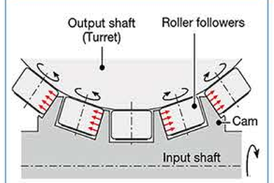

Performance Comparison

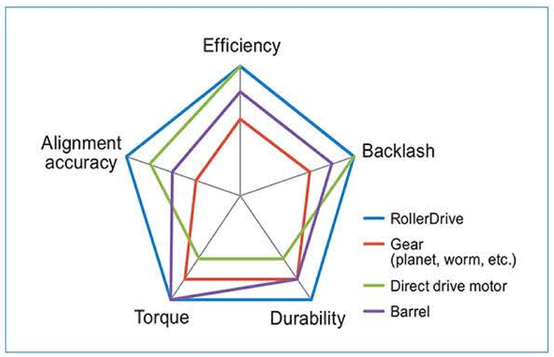

RollerDrive® RGV series

Zero-backlash positioner Standard model

Features
- Varied lineup of reduction ratios and sizes
- Large output torque from a compact servo motor
- Capable of handling heavy and uneven loads easily
- Lightweight and compact

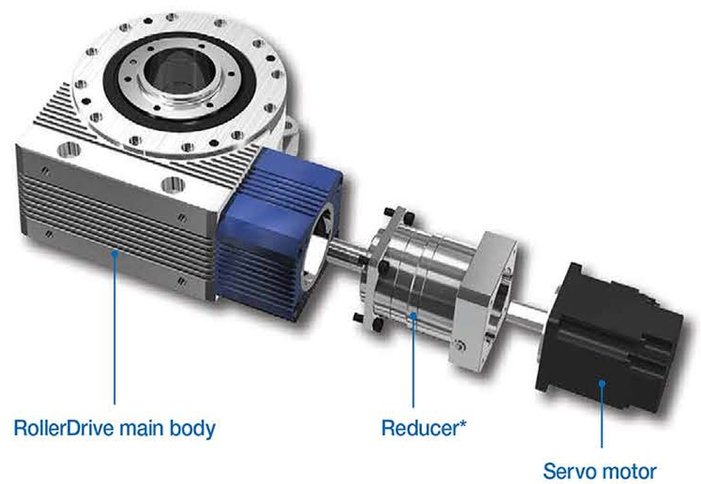

*For high gear ratio model

Deceler Vibrotek Controls Pvt. Ltd.
+91 - 9445525883 / sales@deceler.in / www.deceler.in

Product Code

Product Code

1 RGV	2 063	-	3 072	4 G	5 T	6 A

1	2	3	4	5	6
Model	Size	Gear ratio	Lubrication method	Servomotor position	Options
RGV	040	015、	G : Grease lubrication Usable in any position /direction For oil lubrication: 1/2/3/4/5/6 See oil lubrication mounting codes below	T : Standard Mounted on right side of main unit U : Mounted on left side of main unit	Blank : None A : Rustproof specification B : Rustproof/ dustproof/ waterproof specification
	063	012、024、			
	080				
	100				
	125				

RollerDrive components and mounting surface designations

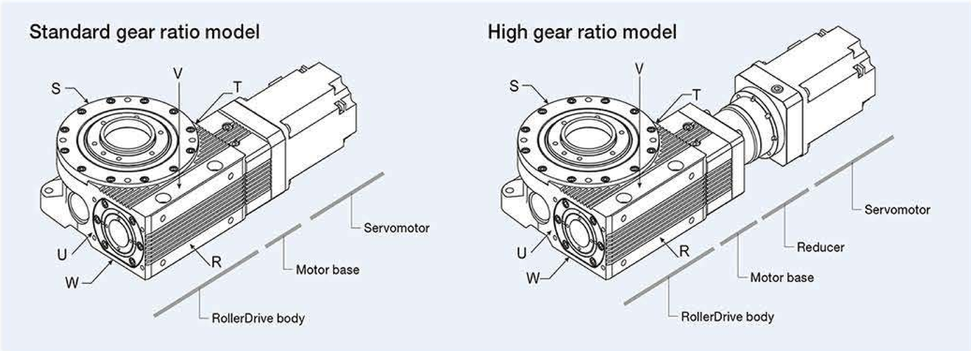

* Shown with servomotor on "T" surface

Oil lubrication mounting codes

1	2	3	4	5	6
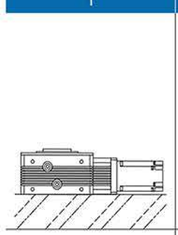	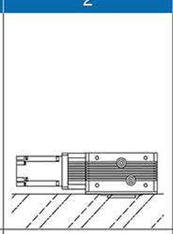	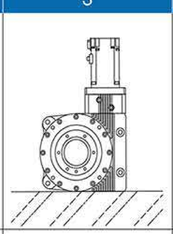	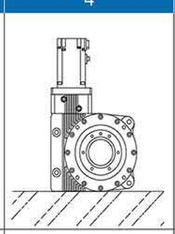	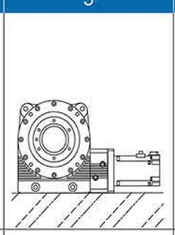	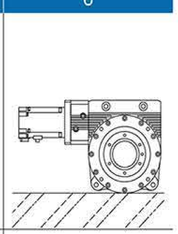
W surface toward bottom	V surface toward bottom	U surface toward bottom	T surface toward bottom	R surface toward bottom	S surface toward bottom

Product Specifications

Grease lubrication type

Model		RGV040			RGV063					
Main unit gear ratio		15			12			24		
Reducer gear ratio		3:1 to 100:1								
Total gear ratio		12:1 to 2400:1								
Start / Stop limit torque	N・m	67			64.2			109.8		
Static output torque	N・m	100			87			184		
Maximum input speed	RPM	1,800	5,400	6,000	1,200	3,600	6,000	1,600	4,800	6,000
Rated input speed	RPM	900	2,700	3,000	600	1,800	3,000	800	2,400	3,000
Maximum output speed *1	RPM	120		80	100			66.7		50
Rated output speed *1	RPM	60		40	50			33.3		25
Repeatability *2	arc sec or less	± 10			± 7					
Allowable axial load (load weight)	N	1,155			2,988			3,486		
Allowable radial load	N	766			2,642			3,082		
Allowable moment load	N・m	42			160			176		
Weight (not including motor) *3	kg	4.3	4.9		8.3	9.7		8.3	9.7	

Model		RGV080						RGV100						RGV125					
Main unit gear ratio		12			24			12			24			12			24		
Reducer gear ratio		3:1 to 100:1																	
Total gear ratio		12:1 to 2400:1																	
Start / Stop limit torque	N・m	108.6			183.8			269.5			457			453.2			771.8		
Static output torque	N・m	155			323			374.5			782			632			1,326		
Maximum input speed	RPM	1,100	3,300	5,500	1,400	4,200	6,000	1,000	3,000	5,000	1,300	3,900	6,000	900	2,700	4,500	1,200	3,600	6,000
Rated input speed	RPM	550	1,650	2,750	700	2,100	3,000	500	1,500	2,500	650	1,950	3,000	450	1,350	2,250	600	1,800	3,000
Maximum output speed *1	RPM	91.7			58.3		50	83.3			54.2		50	75			50		
Rated output speed *1	RPM	45.8			29.2		25	41.7			27.1		25	37.5			25		
Repeatability *2	arc sec or less	± 5						± 5						± 5					
Allowable axial load (load weight)	N	3,687			4,015			4,118			4,242			7,510			8,301		
Allowable radial load	N	3,192			3,546			3,496			3,741			6,624			7,321		
Allowable moment load	N・m	253			278			446			520			1,005			1,164		
Weight (not including motor) *3	kg	15.2	16.3		15.2	16.3		26.1	29.0		26.1	29.0		44.9	48.8		44.9	48.8	

*1 Contact Sankyo in the case of output with continuous rotation at 360 degrees or more.
*2 Indicates the accuracy for the main unit without the reducer (wiith a 3:1 to 100:1 gear ratio reducer, contact Sankyo).
*3 May vary slightly depending on reduction ratio and motor specifications.

Deceler Vibrotek Controls Pvt. Ltd.
+91 - 9445525883 / sales@deceler.in / www.deceler.in

RGV063 Dimensions

▶ Dimensions of Standard Gear Ratio Models (Options: None/A)

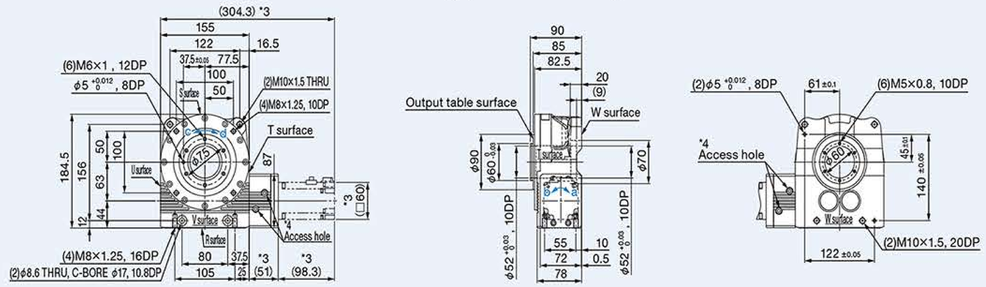

▶ Dimensions of Standard Gear Ratio Models (Options: B)

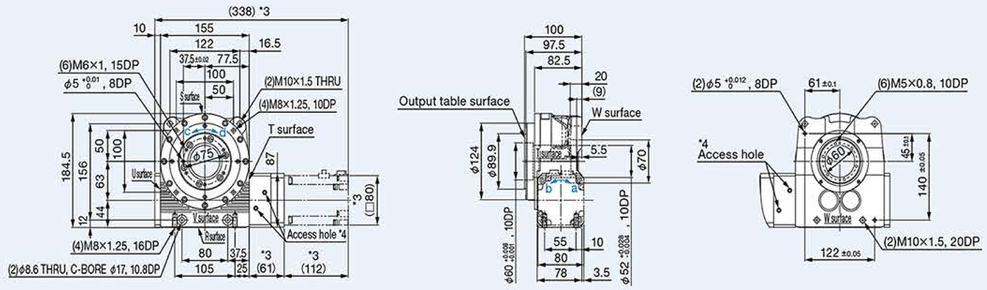

▶ Dimensions of High Gear Ratio Models (Options: None/A)

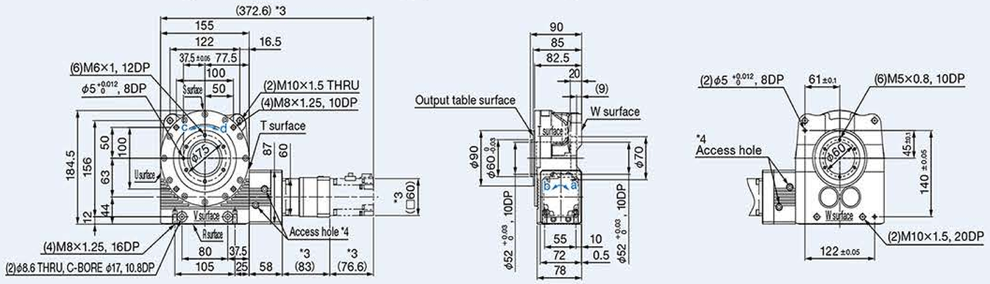

▶ Dimensions of High Gear Ratio Models (Options: B)

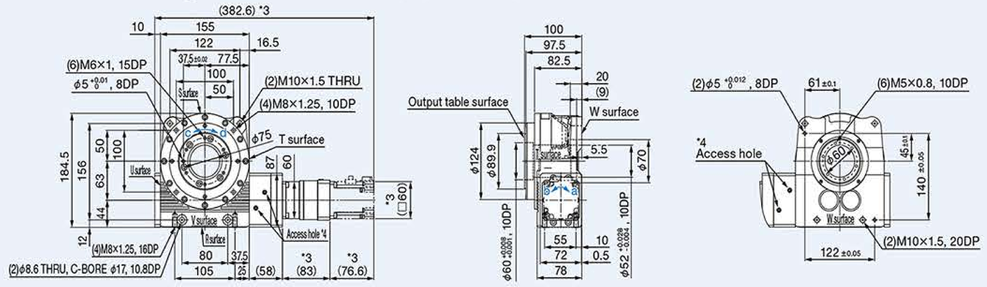

*1 This drawing is for a model where the motor is mounted on the T surface. *2 The rotating directions of input-output axes are related as a-d and b-c.
*3 Dimensions in parentheses ( ) vary depending on the motor. *4 There are two access holes on the V surface and two on the W surface.
*5 Due to its mounting position, the positions of the oil plug, oil level, and drain differ for the oil lubrication type. See P. 23. *6 The servo motor will need to be prepared by the customer.

RGV080 Dimensions

▶ Dimensions of Standard Gear Ratio Models (Options: None/A)

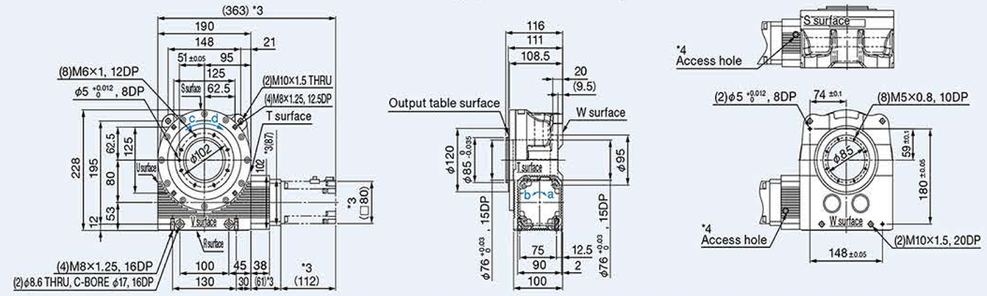

▶ Dimensions of Standard Gear Ratio Models (Options: B)

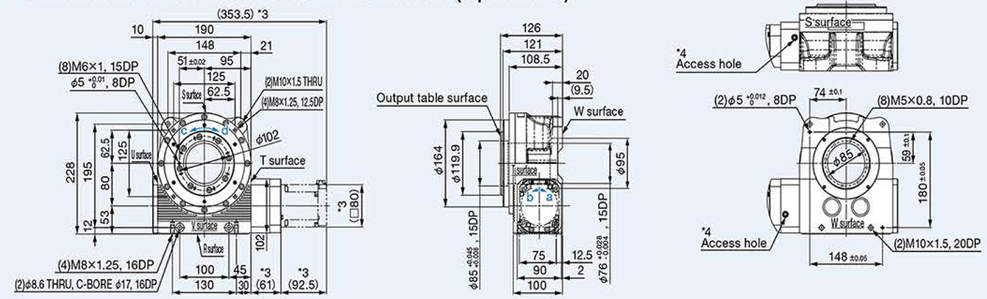

▶ Dimensions of High Gear Ratio Models (Options: None/A)

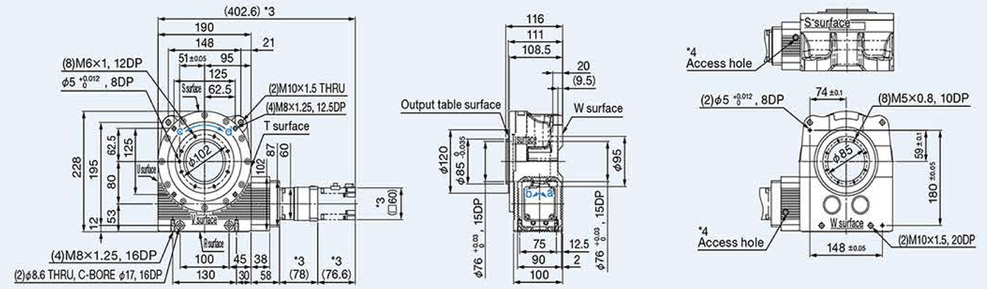

▶ Dimensions of High Gear Ratio Models (Options: B)

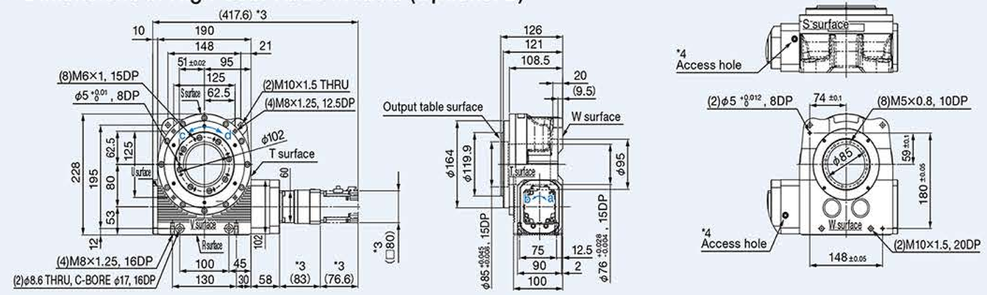

*1 This drawing is for a model where the motor is mounted on the T surface. *2 The rotating directions of input-output axes are related as a-d and b-c.
*3 Dimensions in parentheses ( ) vary depending on the motor. *4 There is one access hole on the S surface and one on the W surface.
rication type. See P. 23. *6 The servo motor will need to be prepared by the customer.

Deceler Vibrotek Controls Pvt. Ltd.
+91 - 9445525883 / sales@deceler.in / www.deceler.in

RGV100 Dimensions

▶ Dimensions of Standard Gear Ratio Models (Options: None/A)

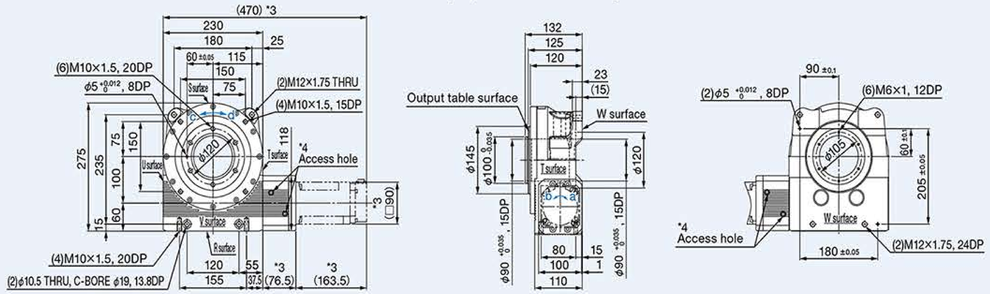

▶ Dimensions of Standard Gear Ratio Models (Options: B)

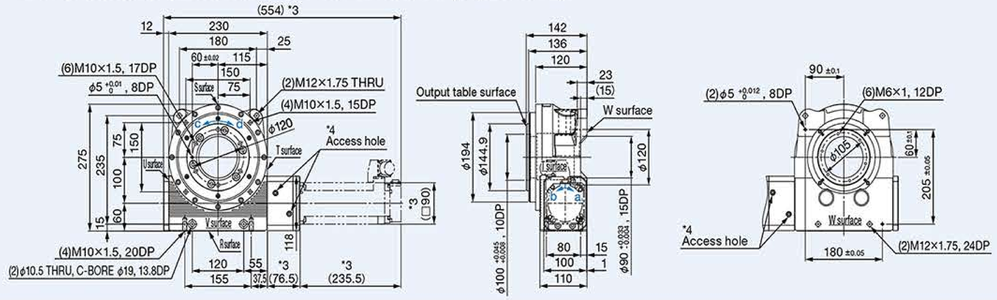

▶ Dimensions of High Gear Ratio Models (Options: None/A)

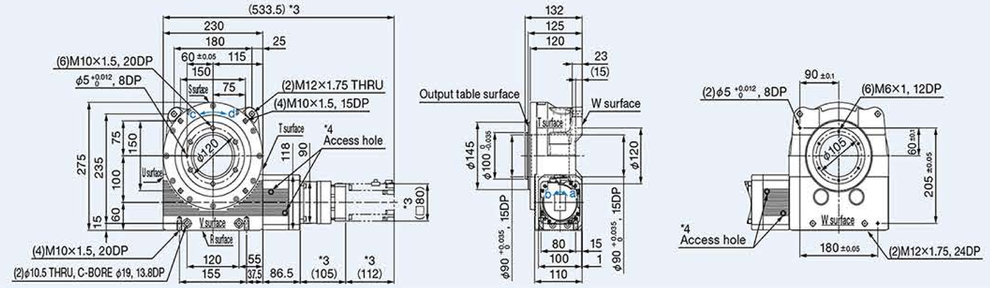

▶ Dimensions of High Gear Ratio Models (Options: B)

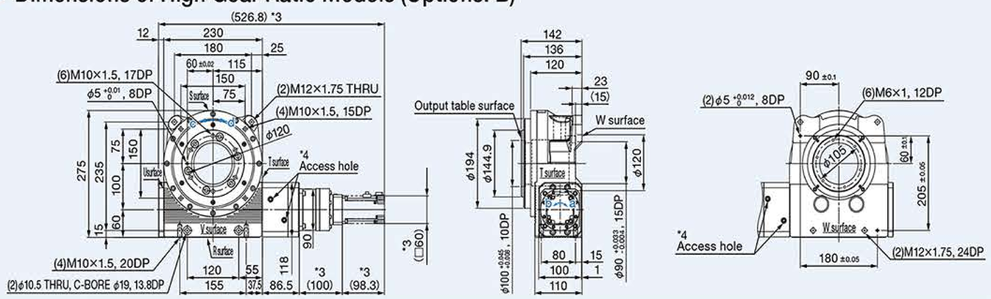

*1 This drawing is for a model where the motor is mounted on the T surface. *2 The rotating directions of input-output axes are related as a-d and b-c.
*3 Dimensions in parentheses ( ) vary depending on the motor. *4 There are two access holes on the V surface and two on the W surface.
*5 Due to its mounting position, the positions of the oil plug, oil level, and drain differ for the oil lubrication type. See P. 23. *6 The servo motor will need to be prepared by the customer.

RGV125 Dimensions

▶ Dimensions of Standard Gear Ratio Models (Options: None/A)

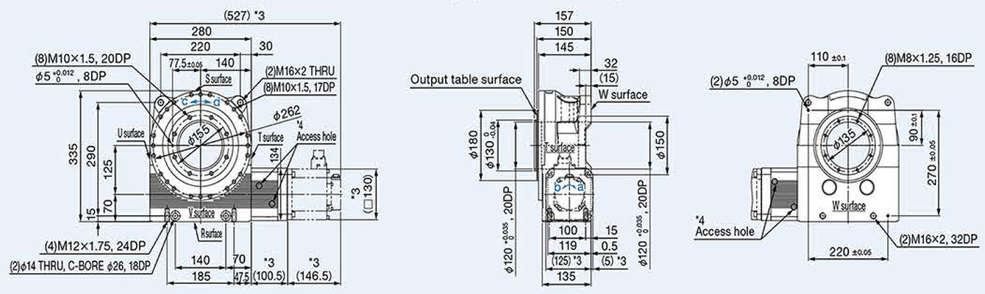

▶ Dimensions of Standard Gear Ratio Models (Options: B)

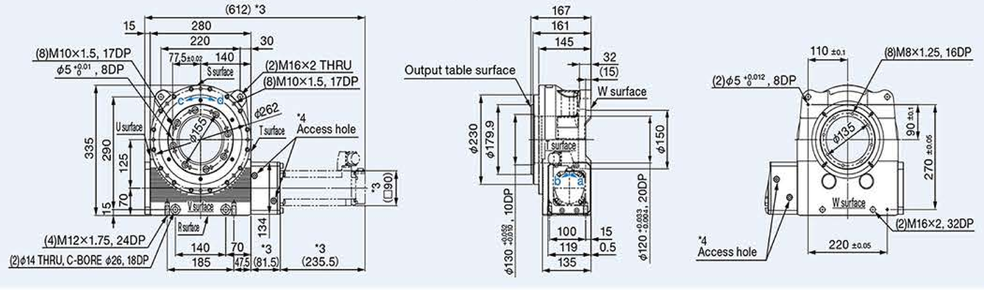

▶ Dimensions of High Gear Ratio Models (Options: None/A)

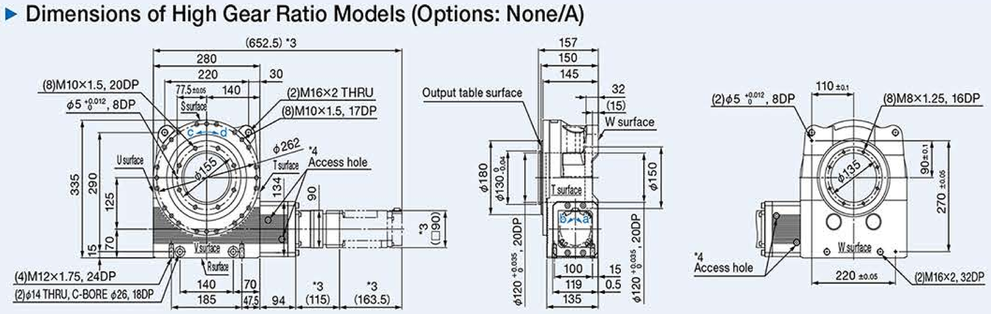

▶ Dimensions of High Gear Ratio Models (Options: B)

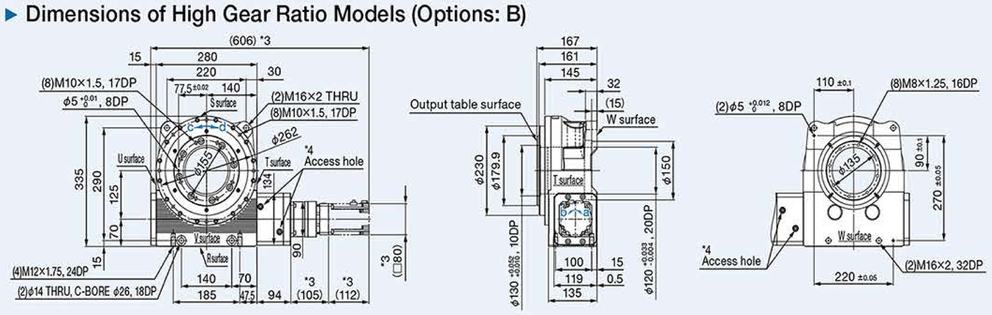

*1 This drawing is for a model where the motor is mounted on the T surface. *2 The rotating directions of input-output axes are related as a-d and b-c.
*3 Dimensions in parentheses ( ) vary depending on the motor. *4 There are two access holes on the V surface and two on the W surface.
*5 Due to its mounting position, the positions of the oil plug, oil level, and drain differ for the oil lubrication type. See P. 23. *6 The servo motor will need to be prepared by the customer.

Deceler Vibrotek Controls Pvt. Ltd.
+91 - 9445525883 / sales@deceler.in / www.deceler.in

Oil Plug, Oil Level, Drain Position (Oil lubrication types)

Unit: mm

Mounting position	1	2	3	4	5	6
RGV040	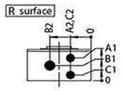	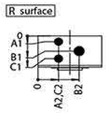	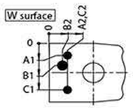	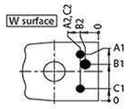	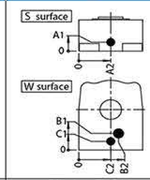	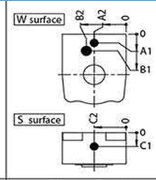
A	Oil plug Rc1/4	Oil plug Rc1/4	Oil plug Rc1/4	Oil plug Rc1/4	Oil plug Rc1/4	Oil plug Rc1/4
A1	55	14	26	89	20	20
A2	53.5	53.5	56	56	57.5	57.5
B	Oil level	Oil level	Oil level	Oil level	Oil level	Oil level
B1	32.5	32.5	39.5	75.5	38	38
B2	68.5	68.5	38	38	75.5	75.5
C	Drain Rc1/4	Drain Rc1/4	Drain Rc1/4	Drain Rc1/4	Drain Rc1/4	Drain Rc1/4
C1	14	55	89	26	20	20
C2	53.5	53.5	56	56	57.5	57.5
Oil amount (L)	0.09	0.1	0.13	0.12	0.05	0.14
RGV063	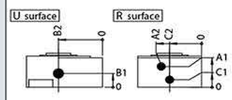	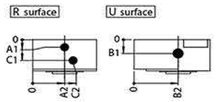	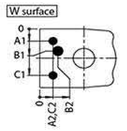	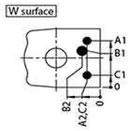	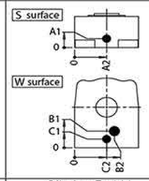	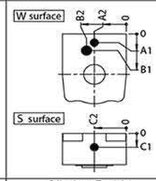
A	Oil plug Rc1/4	Oil plug Rc1/4	Oil plug Rc1/4	Oil plug Rc1/4	Oil plug Rc1/4	Oil plug Rc1/4
A1	55	20	32	123	23.5	23
A2	98	77.5	32	32	77.5	77.5
B	Oil level	Oil level	Oil level	Oil level	Oil level	Oil level
B1	36.5	36.5	58.5	96.5	44	44
B2	107	107	44	44	96.5	96.5
C	Drain Rc1/4	Drain Rc1/4	Drain Rc1/4	Drain Rc1/4	Drain Rc1/4	Drain Rc1/4
C1	20	55	123	32	23	23.5
C2	77.5	98	32	32	77.5	77.5
Oil amount (L)	0.15	0.16	0.2	0.19	0.1	0.21
RGV080	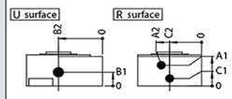	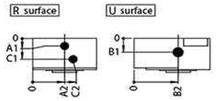	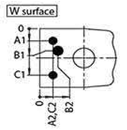	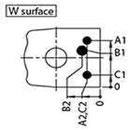	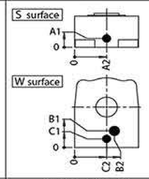	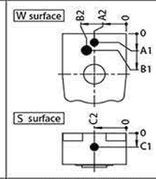
A	Oil plug Rc3/8	Oil plug Rc3/8	Oil plug Rc3/8	Oil plug Rc3/8	Oil plug Rc1/4	Oil plug Rc3/8
A1	73	22	41	149	29	31
A2	120	95	34	34	95	95
B	Oil level	Oil level	Oil level	Oil level	Oil level	Oil level
B1	47	47	66	124	51	51
B2	133	133	51	51	124	124
C	Drain Rc3/8	Drain Rc3/8	Drain Rc3/8	Drain Rc3/8	Drain Rc3/8	Drain Rc1/4
C1	22	73	149	41	31	29
C2	95	120	34	34	95	95
Oil amount (L)	0.31	0.35	0.43	0.42	0.18	0.48
RGV100	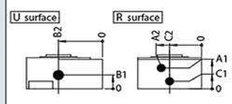	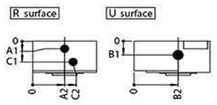	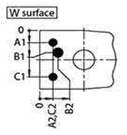	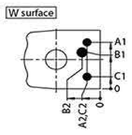	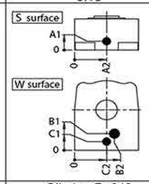	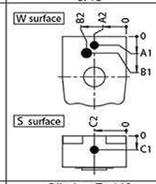
A	Oil plug Rc1/2	Oil plug Rc1/2	Oil plug Rc1/2	Oil plug Rc1/2	Oil plug Rc3/8	Oil plug Rc1/2
A1	80	25	48	182	39	32
A2	145	115	48	48	115	115
B	Oil level	Oil level	Oil level	Oil level	Oil level	Oil level
B1	51	51	74	156	72	72
B2	160	160	72	72	156	156
C	Drain Rc1/2	Drain Rc1/2	Drain Rc1/2	Drain Rc1/2	Drain Rc1/2	Drain Rc3/8
C1	25	80	182	48	32	39
C2	115	145	48	48	115	115
Oil amount (L)	0.46	0.56	0.7	0.68	0.37	0.65
RGV125	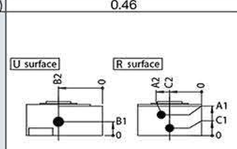	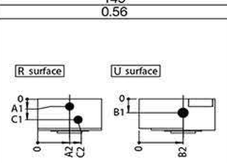	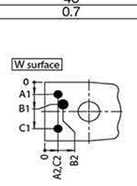	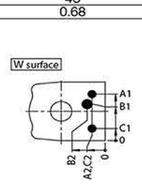	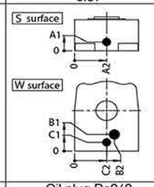	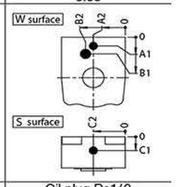
A	Oil plug Rc1/2	Oil plug Rc1/2	Oil plug Rc1/2	Oil plug Rc1/2	Oil plug Rc3/8	Oil plug Rc1/2
A1	95	30	55	225	43	35
A2	180	140	50	50	140	140
B	Oil level	Oil level	Oil level	Oil level	Oil level	Oil level
B1	60	60	88	192	88	88
B2	195	195	88	88	192	192
C	Drain Rc1/2	Drain Rc1/2	Drain Rc1/2	Drain Rc1/2	Drain Rc1/2	Drain Rc3/8
C1	30	95	225	55	35	43
C2	140	180	50	50	140	140
Oil amount (L)	0.79	1.01	1.22	1.2	0.7	1.1

Application Form, Request For Quote

Attention: _____ Date: _____

Our contact person: _____

Model Sizing Form for the *RollerDrive*® RGV series

Customer's Company, Department	Tel
Address	Fax
Name	Email

A) Application

B) Overview drawing, loads, operating environment, etc.
(Include any tables, workpieces, or jigs that will be attached to the RGV output shaft, and any loads that will be applied during rotation.)

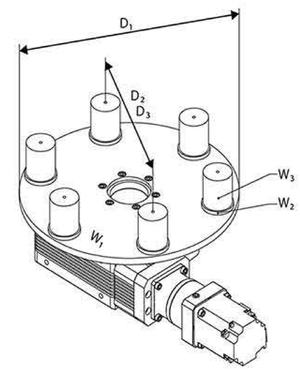

Load applied to output shaft

Table diameter : D_1 [mm]	
Table weight : W_1 [kg]	
Jig P.C.D. : D_2 [mm]	
Weight per jig : W_2 [kg]	
Jig quantity : n_2 [pcs]	
Workpiece P.C.D. : D_3 [mm]	
Weight per workpiece : W_3 [kg]	
Workpiece quantity : n_3 [pcs]	
Axial/radial load [N]	Moment load [N·m]

C) Motion pattern ※Required information

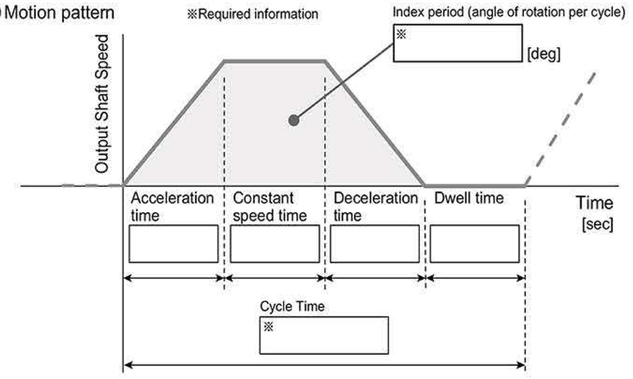

E) Intended servomotor
Manufacturer _____
Model No. _____
Motor power (rated output) _____ [kW]

F) Mounting direction of servomotor
T surface (right side viewed from front)
U surface (left side viewed from front)
Circle applicable answer.

G) Attachment code

D) Lubrication method and position/direction Please choose one.

Lubrication method : ☐ Grease lubrication ☐ Oil lubrication

Position/direction : ☐ W surface toward bottom ☐ V surface toward bottom ☐ U surface toward bottom ☐ T surface toward bottom ☐ R surface toward bottom ☐ S surface toward bottom

H) Options
☐ None ☐ A : Rustproof
☐ B : Rustproof/dustproof/waterproof

RGV-2020/10E-S

Contact at Sankyo _____

Deceler Vibrotek Controls Pvt. Ltd.

+91 - 9445525883 / sales@deceler.in / www.deceler.in

SAFETY AUTOMATION

FACTORY AUTOMATION

deceler vibrotek®

selling solutions ...

SINCE 2013

Represented by:

DECELER VIBROTEK CONTROLS PVT. LTD.

No.38, 1st Floor, Arul Mary Street, Soosaiya Nagar,
Noombal, Chennai - 600 077. Tamilnadu, India

91 9445525883

sales@deceler.in

www.deceler.in

Our Existence:

Chennai | Coimbatore | Hyderabad | Vizag
Bengaluru | Delhi | Mumbai | Pune

SANKYO AUTOMATION

10655 State Route 47
Sidney, Ohio 45365
Phone: 937.498.4901
sales@sankyoautomation.com
www.sankyoautomation.com